ASTRALPOOL

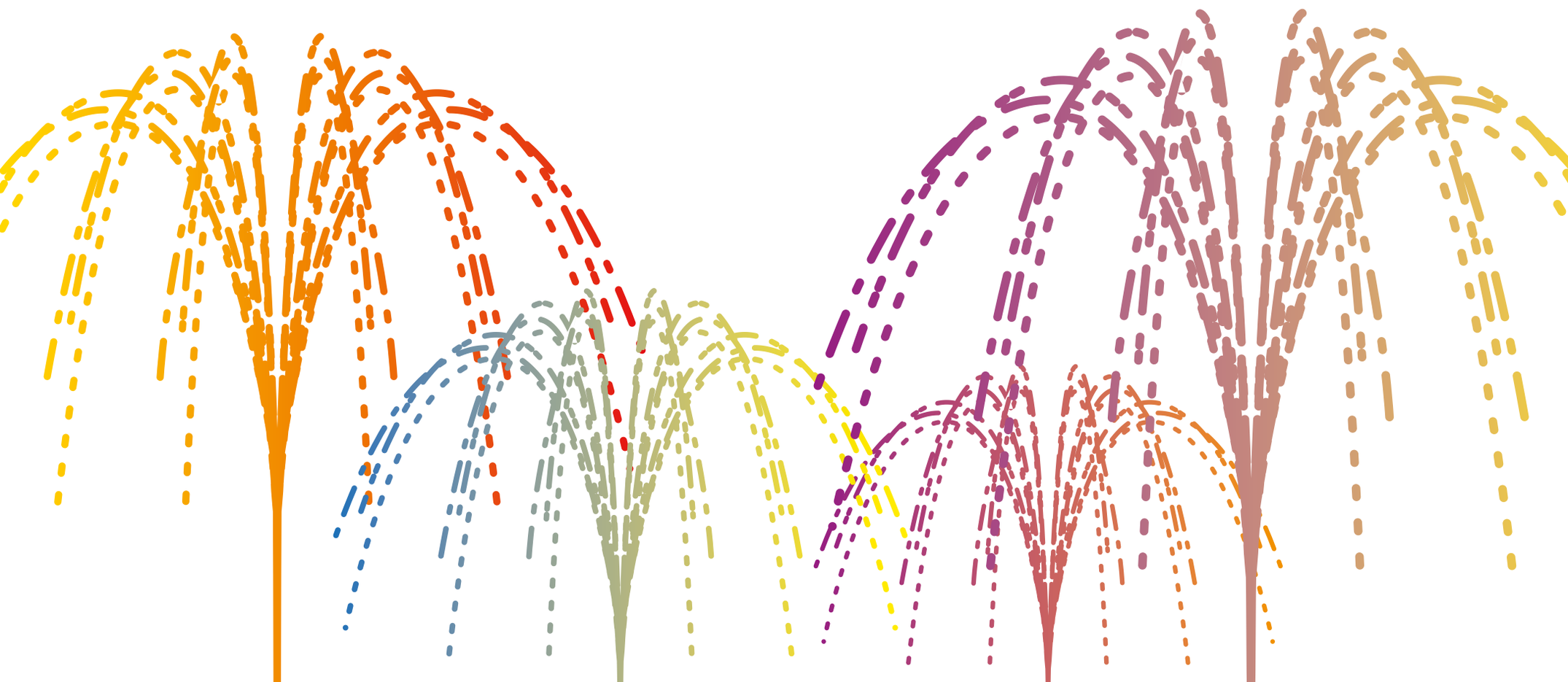

Fountains

PROJECT & PRODUCT

CATALOGUE


Foun

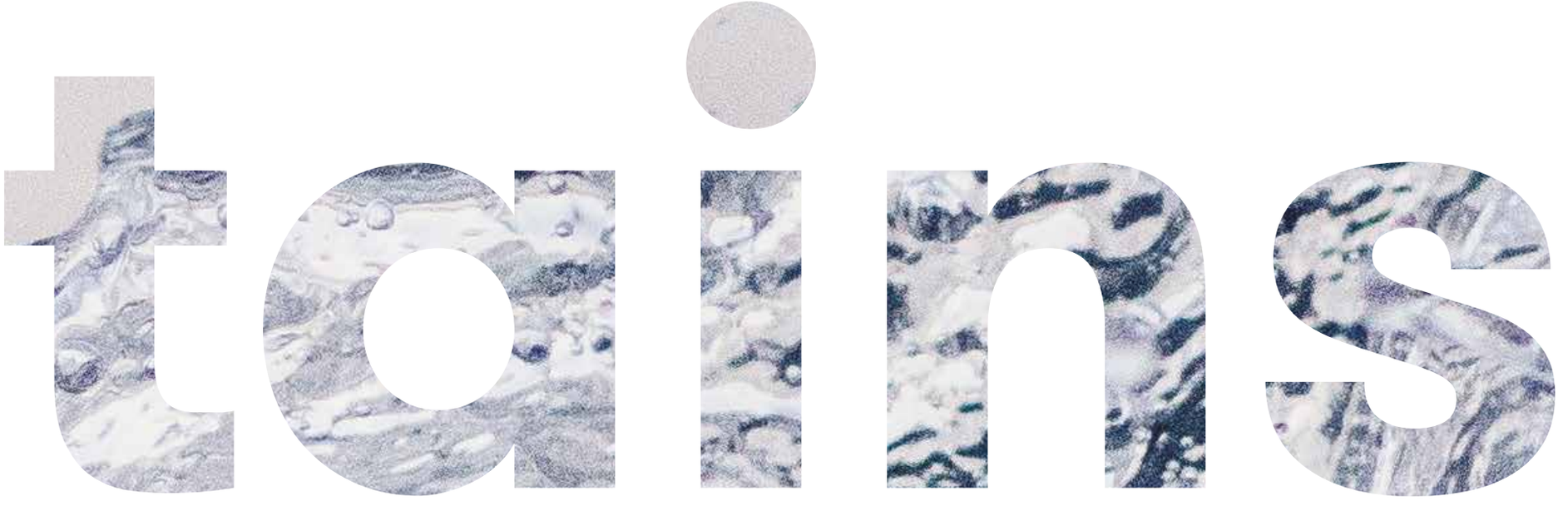

the heart is the fountain of life.



Fountains

PROJECT & PRODUCT

CATALOGUE

CONTENTS

WATER

008 **Origin** Where life is born
008 **Values** Associated with water
010 **Meaning** What water means for human beings
012 **History** The worship of water

FOUNTAIN

016 **Description and metaphor** What is a fountain?
018 **History** Synonymous with life since the beginning of time
022 **Evolution** Natural and artificial
022 **Types** Natural and artificial, decorative and functional

COMPANY

028 **ASTRALPOOL** Philosophy
034 **About us** Professionals
040 **Facilities** Our space
042 **Projecting ideas** Our inspiration
044 **What we offer**
048 **R&D** Research

PROJECTS

050 **Some of our projects**

PRODUCTS

140 **Customizable Fountains**
Digital Curtain
Digital Curtain App
Funsquare
Water Screen
Water Curtain
Water Curtain With Linear Led
Waterfall
Geyser Jet
Plug & Play
Dmx Variable Pump S
Dmx Variable Pump L

152 **Jets**
Spear Nozzle
Big Spear Nozzle
Fan Jet Nozzle
Cascade Nozzle
Foamy Nozzle
Foamy Hollow Nozzle 1”
Fog Nozzle
Vulcano Nozzle S
Mushroom Nozzle
Dancer Jet
Swing Dancer Jet
Dancer Nozzle
Glassy Jet With Jumping Effect
Glassy Jet
Glassy Jet Without Light
Rocket Jet
Rocket Jet Horizontal
Fire Jet
Switch S System
Switch L System
Cosmos

184 **Interaction**
Inmotion System
Interactive Sensor Buttons

186 **Illumination**
Niq projector
Nano Projector
Mini/Mini+ Projector
Circular Ø200
Circular Ø300
Halospot Projector
Kibele projector
Linear Escala projector
Adjustable Linear Projector
Starry Sky effect
Waterproof connection
OnDMX control system
OnDMX PRO control system
DMX Driver Onled Power Supply
DMX Driver Onled External Power Supply
OnLED modulator
OnLED remote control
OnLED WiFi Access Point
OnLED APP
Power supply
Safety transformers
V:Nano
V:Server3 Touch

222 **Complementary Products**
Level Control System
Wind Control System
Pipe Fitting
Cable Inlet Fitting 1 - 2” Female Thread
Prefilter LFS
Pressure Holding Valve
Overflow
Floor Drain
Junction Boxes
Cable Inlet Fitting
Cable Inlet Fitting Box
Electric Valves CPV
Swivel
LF filters
HFL filters
Victoria Plus Silent pump
Kivu Pump
Submersible Pump Df With Prefilter
Arals Strainers
Aster Filters
Drain grille in stainless steel
Breturn Inlet
Waterproof Junction
Optima Next
Controller
3.5 kg Dossi-3
Dossi-5
Power Signal UV
Buster UV-C Units



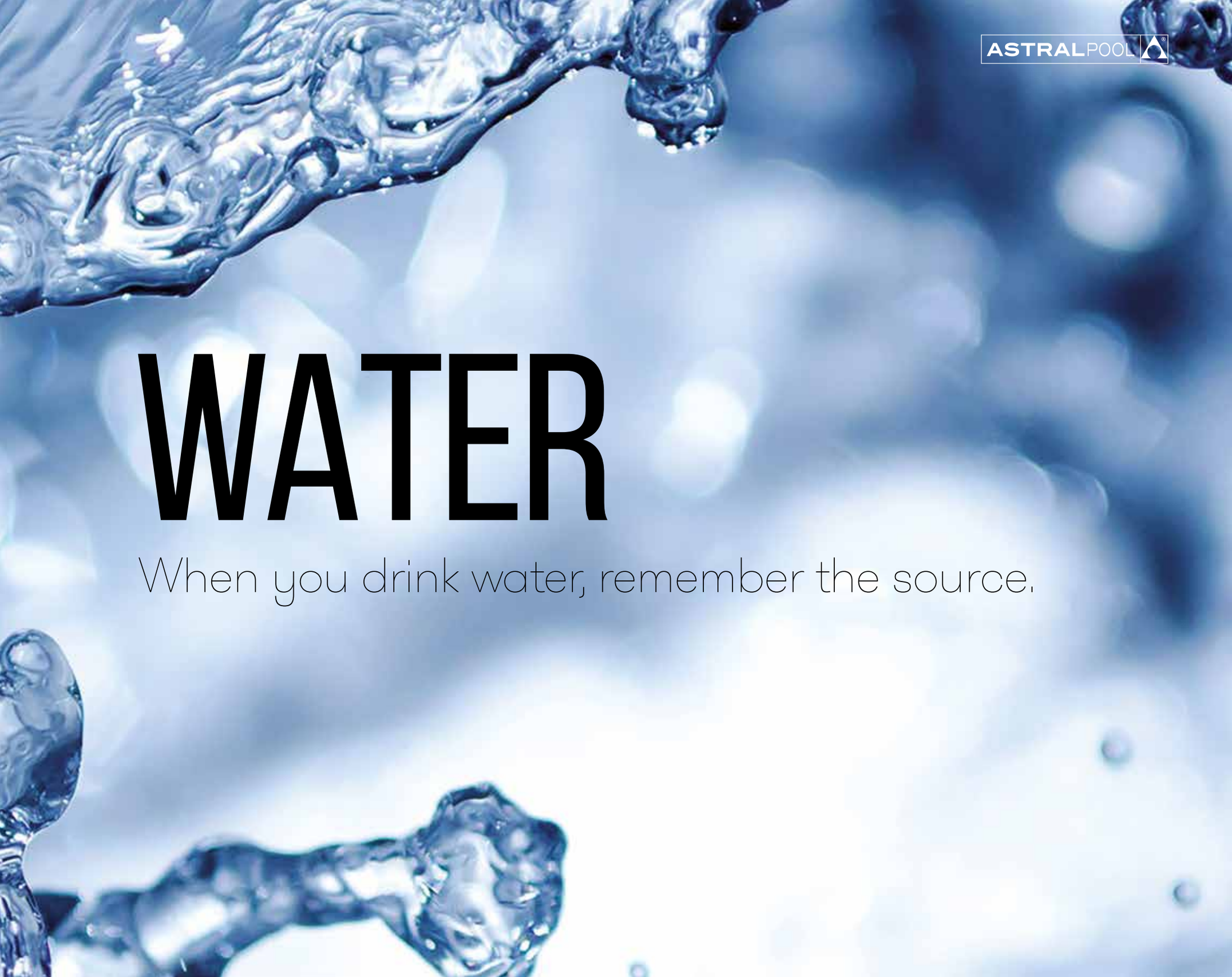
ASTRALPOOL
WATER
When you drink water, remember the source.

WHERE LIFE IS BORN

Water is the source of everything. Nothing as we know it would exist without it. Animals, plants, our very lives would be impossible were it not for water, a substance that covers over 70% of the earth's surface in its three states: liquid, solid and gas.

Liquid, transparent, odourless, colourless and tasteless: all living beings need water to survive.

ASSOCIATED WITH WATER

Water is inspiration, peace, harmony. It is a source of beauty and calm.

It flows in rivers, is still in lakes and unleashes its fury in the seas and oceans.

Water extinguishes fire, but supports life.




ASTRALPOOL





WHAT WATER MEANS FOR HUMAN BEINGS

Water has been here since the beginning of time, and yet we have always sought it out. All living beings have based their existence on the search for water, settling near water sources (rivers, lakes, seas) or diverting these sources to their settlements. Because water is vital, essential, and nothing would exist without it.

How was life created?
The question remains unanswered.

But what supports life?
The answer is easy: water.

THE WORSHIP OF WATER

Symbol of purification and an expression of the sacred, water is the fountain of life. It is associated with medicinal and healing qualities.

Water plays a fundamental role in all religions and beliefs, inspiring both worship and respect.

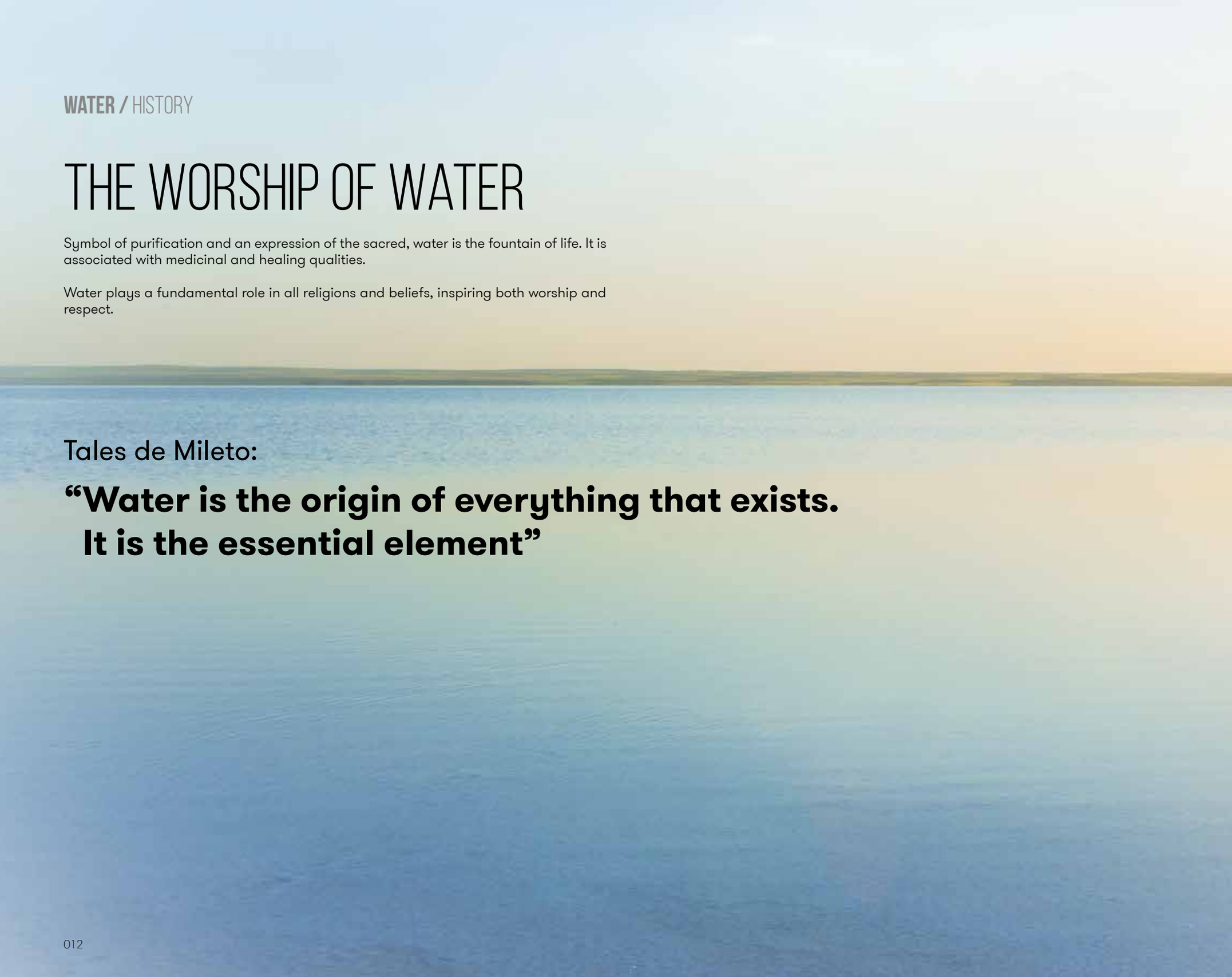

Tales de Mileto:

“Water is the origin of everything that exists. It is the essential element”






ASTRALPOOL
FOUNTAIN
A fountain is generally synonymous with life.

WHAT IS A FOUNTAIN?

A fountain is, without doubt, an expression of the beginning, the origin of things. A source of light, water, information or energy is always the beginning.

Like a spring of water welling up from the earth, the fountain is the source of rivers that cross mountains to end their journey flowing into the sea.

Fountain.
the source or origin of anything.



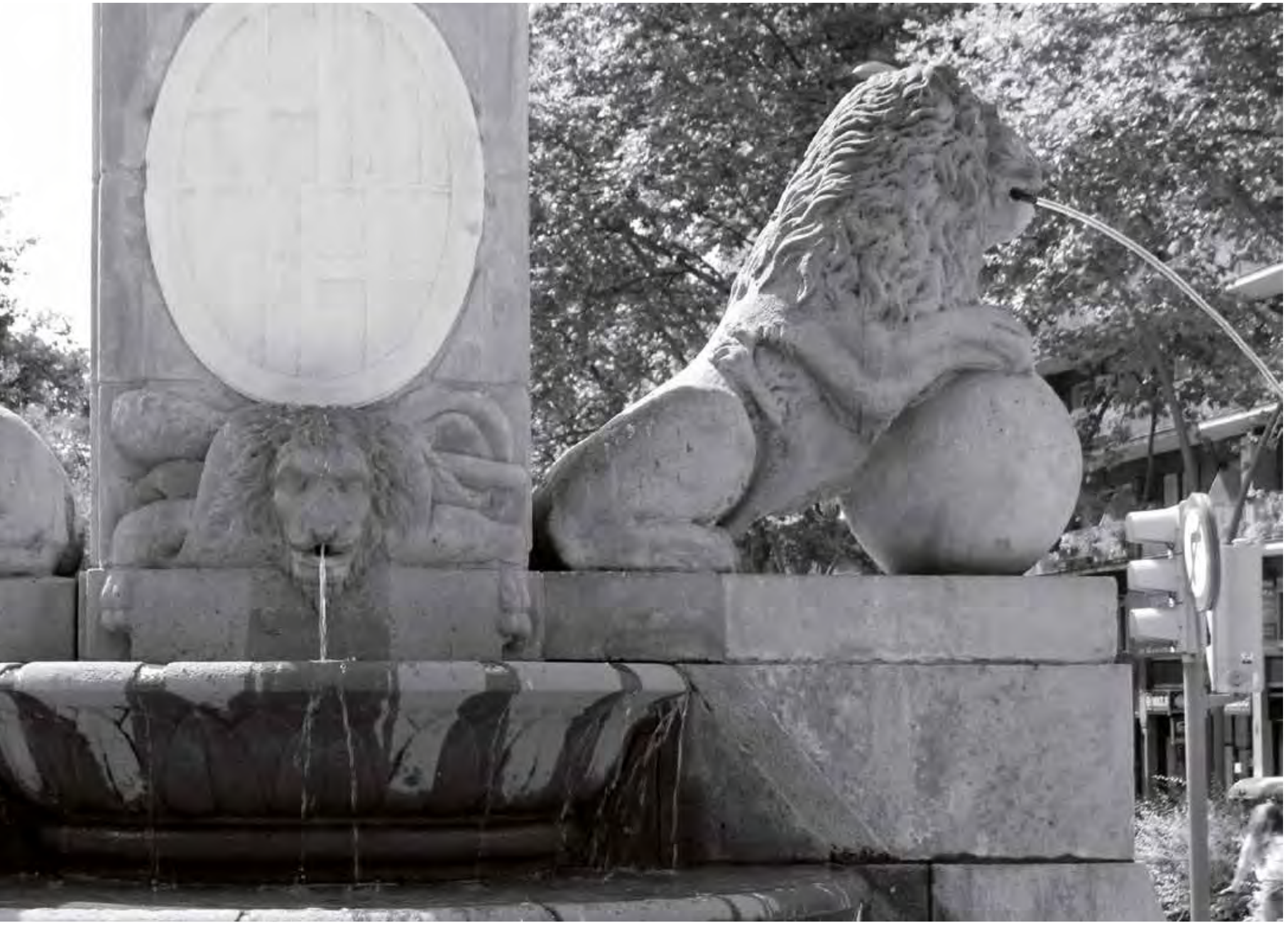







SYNONYMOUS WITH LIFE SINCE THE BEGINNING OF TIME

Fountains have always been synonymous with life,
playing a vital role as a source of happiness, a place where communities gather, a vibrant and dynamic space, a meeting point and a metaphor for life.




ASTRALPOOL

NATURAL AND ARTIFICIAL

Since the dawn of time man has sought to control his environment; water, the planet's dominating element, is one of the elements that man has mastered best. A desire to bring water closer to people resulted in the first fountains, which were typically located in the village centre. Over time and with the development of new materials, the original more functional purpose of these fountains shifted towards a more decorative one, each fountain becoming a unique and spectacular piece.

NATURAL AND ARTIFICIAL, DECORATIVE AND FUNCTIONAL

Today we can enjoy fountains as a more decorative, participatory and spectacular element.

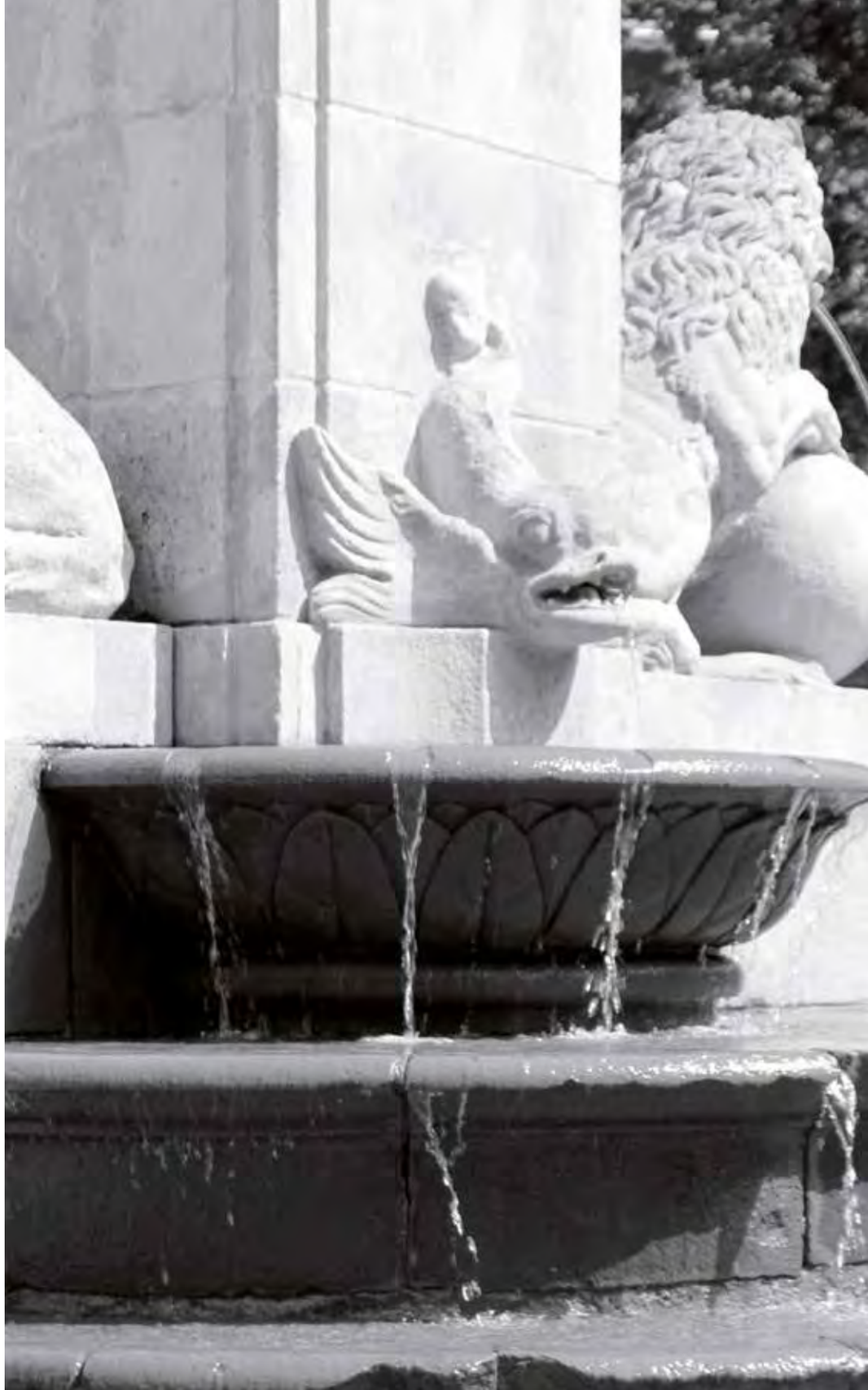








ASTRALPOOL




ASTRALPOOL
ASTRALPOOL
A fountain of ideas.

PHILOSOPHY

ASTRALPOOL, with over 40 years of experience, is the leading brand in the world of swimming pools and ornamental fountains.

The ASTRALPOOL trademark is sold in over 150 countries. It directly sells its products in 45 countries through a network of companies owned by Fluidra, comprisin a total of 130 subsidiaries, warehouses and branch offices. Over 55.000 professionals and 200.000.000 pools use one of our 15.000 products.

Completely innovative and sustainable solutions
Over and above functionality, the products and solutions offered by ASTRALPOOL deliver sustainable responses that enable users to save water and look after the environment while they enjoy their pools and ornamental fountains.

For all of these reasons and many more, our systems and components for residential and commercial pools and fountains are and will continue to be world leaders. We set the benchmark for professionals and private home owners.

Let ASTRALPOOL surprise you once again.

“AstralPool takes a technical approach to the analysis of each project, delivering solutions that make installation and maintenance easier”





CLIENT CONNECTION

The ASTRALPOOL philosophy has always been to assist clients throughout the entire decision-making process. By providing a friendly and attentive service ASTRALPOOL seeks two-way communication and strives to make a connection with clients, always with an approach that best ensures a positive outcome. Client care, advisory services, dialogue and commitment are some of the keys to our success.

ASTRALCARE

ASTRALPOOL closely monitors each project every step of the way. Work is managed and supervised throughout the design, construction, installation and commissioning processes to ensure the utmost rigour and professionalism. Client communication is crucial for making monitoring as easy as possible, tailored to each project's needs.

ENGINEERING&RESEARCH

ASTRALPOOL has always been strongly committed to innovation and creativity. Taking a more creative approach to new projects, we work with the industry's most cutting-edge technology, researching new decorative systems and optimal solutions to create the most innovative effects.

CONCEPT DESIGN

Our work is focused on making unique fountains that reflect each client's individual concept. We transform water into architecture, blending water and nature to create dynamic shapes that integrate into the urban environment.



ANIMATION

To make it easier to evaluate designs, choreography and urban integration, ASTRALPOOL employs 3D animation to give clients a clearer picture of what the final results will look like. This makes it possible to quickly and visually understand the concept, creating an opportunity for clients to suggest changes to better adapt the project to their vision.

COREOGRAPHY

Ultimately, a fountain's most visible element are the movements of water and light. Choreography and sequences that feature water, music and light provide a colourful, dynamic and eye-catching show.

These movements are designed by ASTRALPOOL's experts, who supervise and manage every aspect of the choreography and sequences. As if it were a dance, a ballet: we believe that every water show is unique.

MANUFACTURING

Our technical team develops and manufactures most of the material, which is tailor-made for each project. Each fountain is a new challenge and therefore requires a customised design in which each piece is developed and adapted to the project's particular requirements. This ensures that each design fits the client's needs and vision.

INSTALLATION&COMISSIONING

To ensure that each project runs smoothly, ASTRALPOOL relies on an expert team of technicians who handle the end-to-end installation of new fountains, from properly installing all machinery to setting up all the electrical programming prior to the fountain's commissioning. This guarantees a flawless installation from start to finish.




ASTRALPOOL

PROFESSIONALS

The success of ASTRALPOOL is based on the knowledge and experience of our professionals. Each and every team member contributes and projects ideas, solutions and resources that daily enhance the solutions we propose.

Every challenge, every new project is a reason to improve and implement those solutions, those small details that enhance the product and help to evolve and grow our vision of what business means.

“Each fountain is practically handcrafted, every detail matters”

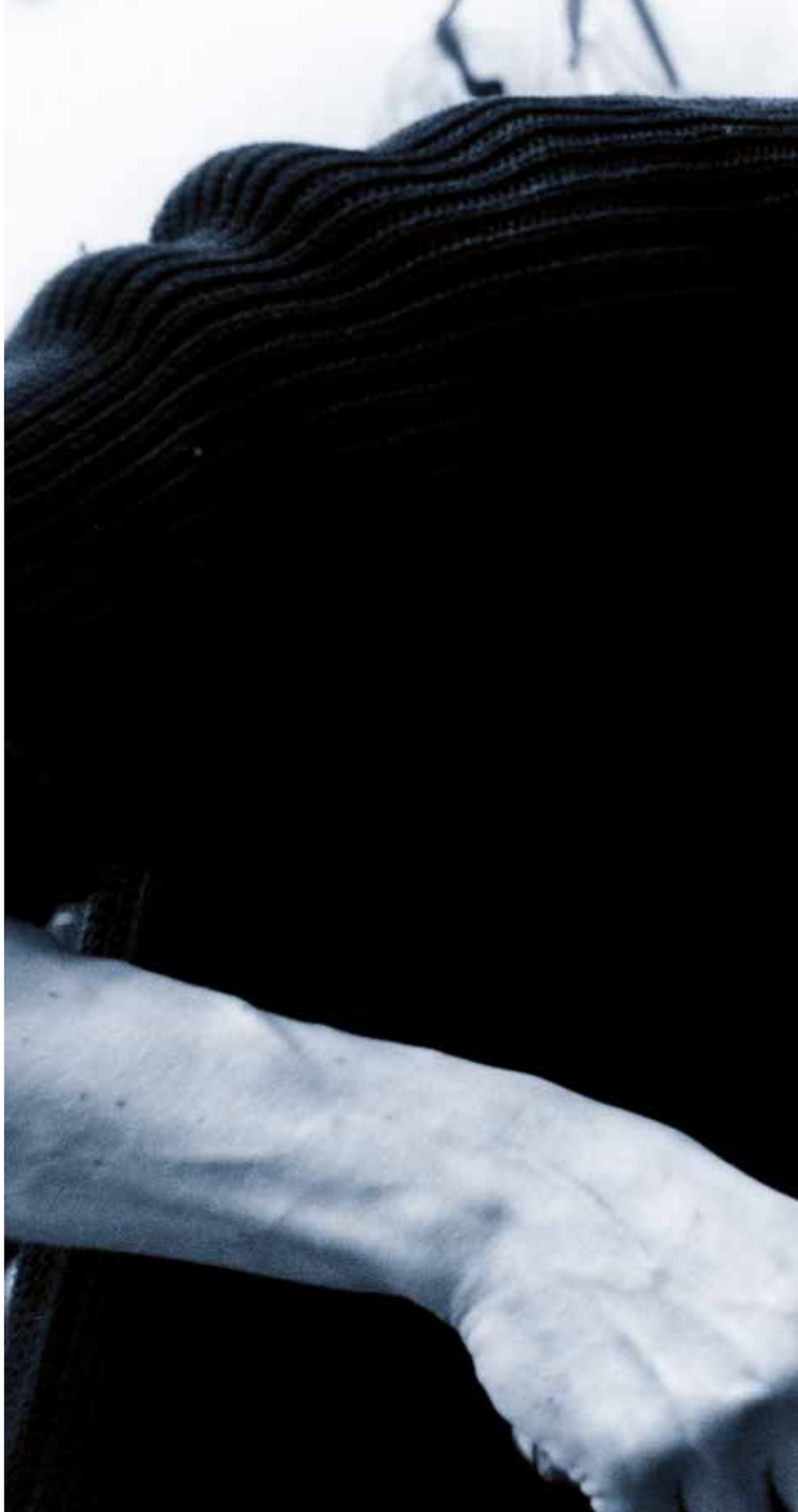


ASTRALPOOL

“We design projects with a forward-looking approach, that are sensitive to the environment and adapt to its needs”

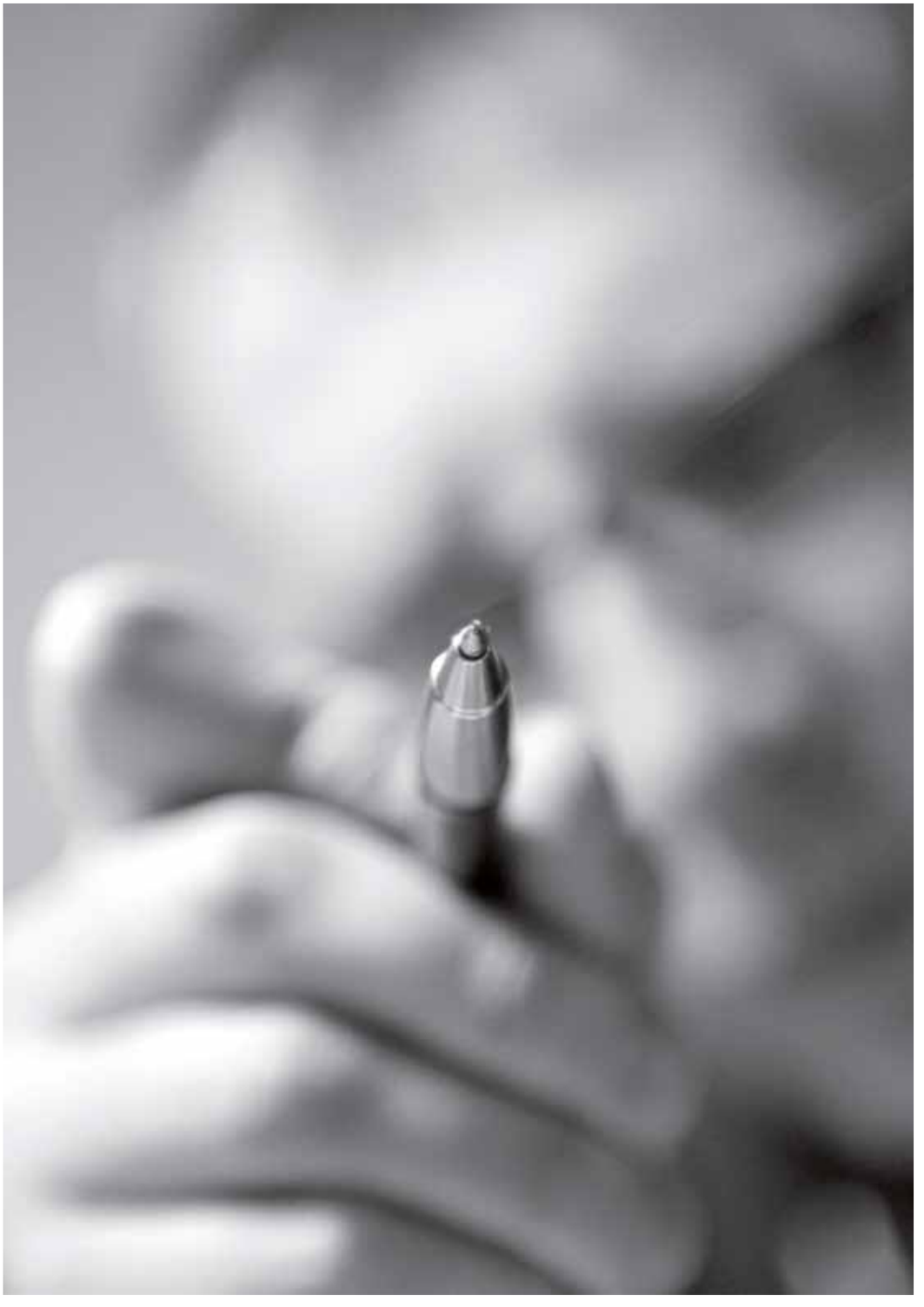


ASTRALPOOL





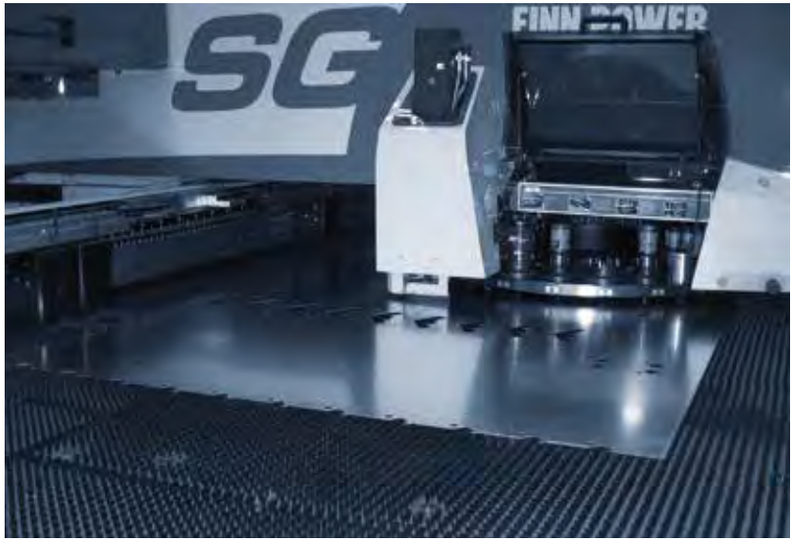
SG
FINN POWER


Luxber
Luxber

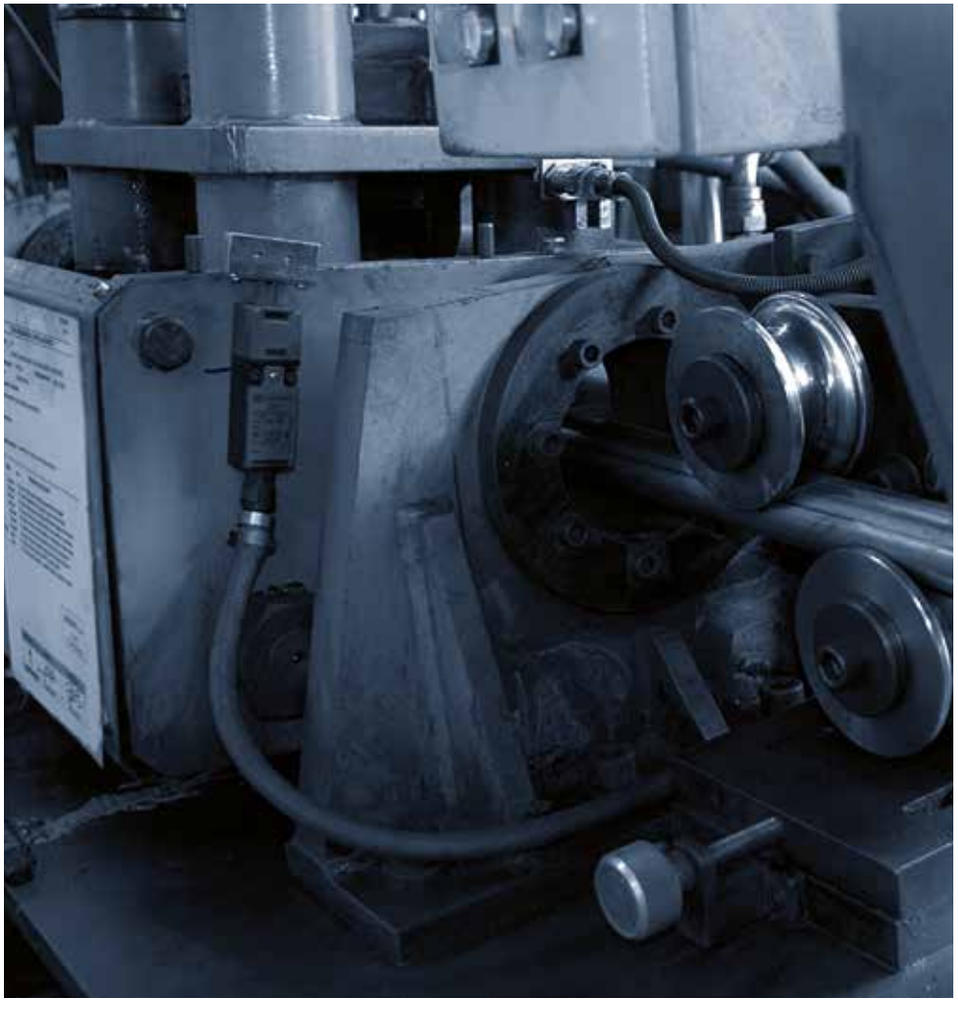













OUR SPACE

“Our modern facilities make it possible for us to plan, study and execute each of our products”



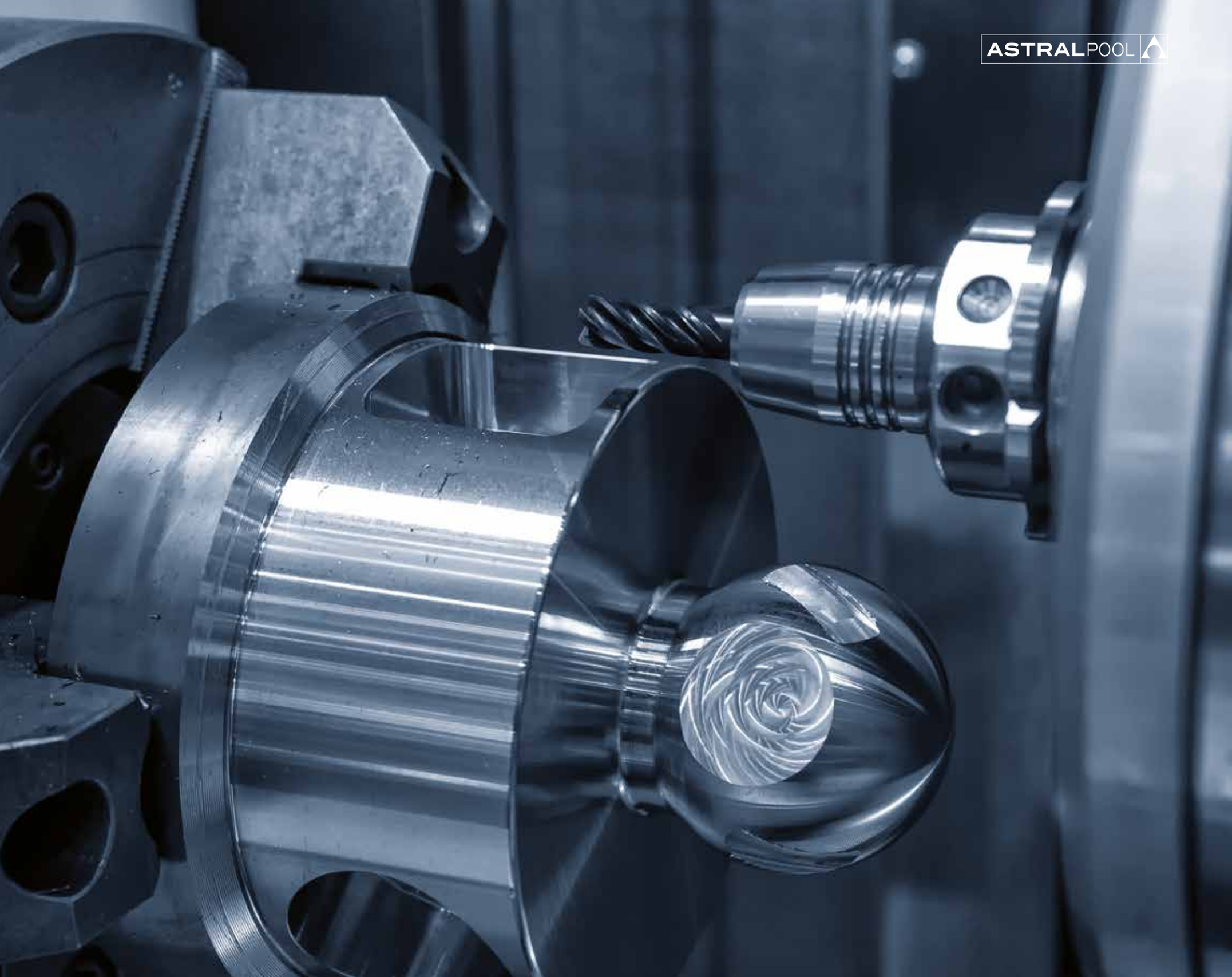

OUR INSPIRATION

ASTRALPOOL mission is to drive society's progress through the sustainable use of water in its range of recreational, domestic and industrial applications.

Water is what we are all about and, as a result, all of ASTRALPOOL's activities are based on the commitment to its responsible use. Savings on costs and reuse of resources underpin any line of action the Group pursues and serve as the basis for product development.

We are committed to promoting the responsible use of water and the rigorous application of sustainability criteria for future generations. We have the ability to adapt with ease, efficiency and rigour, projecting our ideas in an environment we respect and strive to improve.





WHAT WE OFFER

We offer “Water Solutions” for ornamental Fountains, Swimming Pools, Wellness Areas and Lagoons for cities, shopping malls, hotels & resorts, urban spas and fitness clubs.

Water solutions for a unique experience

GLOBAL PRESENCE

We are one of Spain’s largest industrial groups with a global presence. We have our own production centres and a distribution network that operates on five continents.

“global presence is our biggest challenge and project for the future”

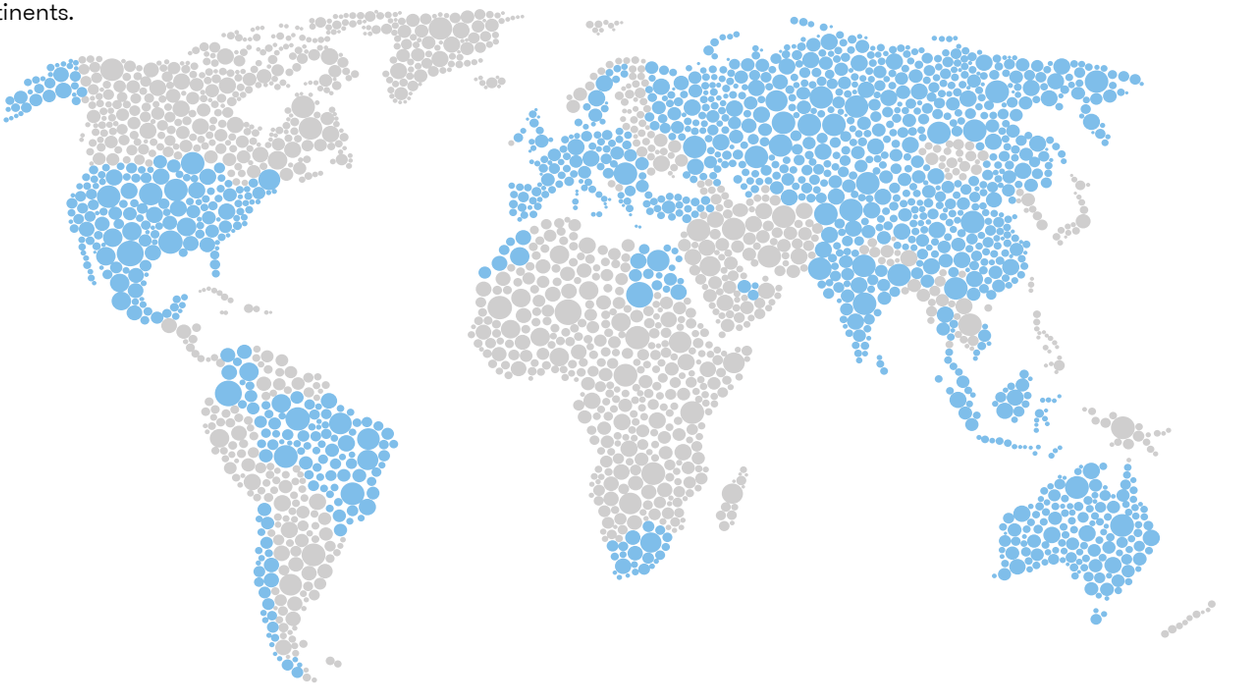

FLUIDRA ENGINEERING SOLUTIONS

Fluidra Engineering has an expert team with extensive experience in concept, design and implement international aquatic projects.

It offers complete solutions by applying its own products and working in an integrated manner with its clients.

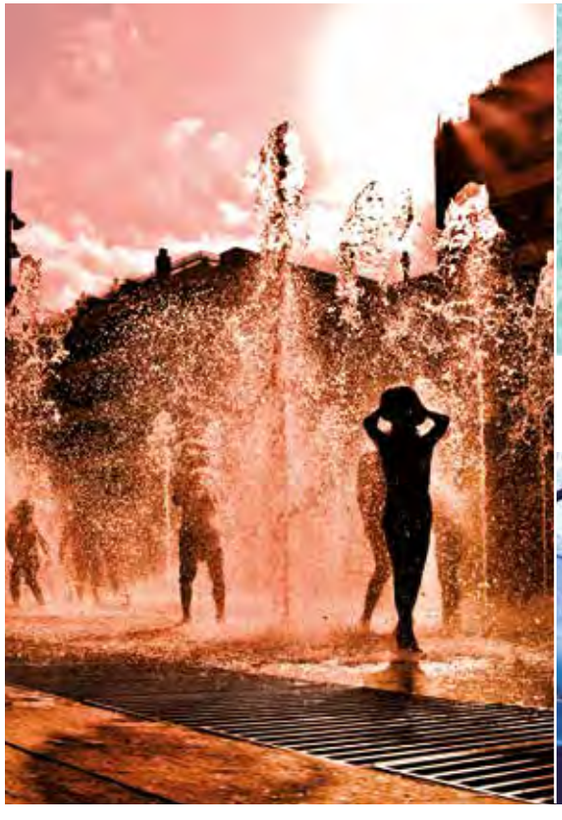

FOUNTAINS



LAGOONS



COMMERCIAL POOLS



WELLNESS CENTERS



AQUARIUMS

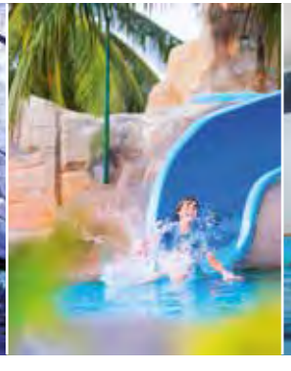

WATER PARKS



COMPETITION

FLUIDRA ENGINEERING SERVICES

As a “Solution Partner”, Fluidra is able to manage a project from the preliminary consultancy all the way to project architecture and design, project engineering and management, equipment manufacturing and distribution.

Fluidra also helps in planning and implementing bespoke solutions, designed by architects and designers.

PRELIMINARY CONSULTANCY

- Conceptualization
- Preliminary design
- Budget estimation

ENGINEERING AND DESIGN

- Basic project
- Executive project
- Equipment sizing and calculation
- Advice on water care
- **Innovative solutions & technological development**
- **BIM (Building Information Modelling)**
- **Computational Fluid Dynamics (CFD)**
- **Fluidra Virtual reality**

EQUIPMENT MANUFACTURING

- 37 manufacturing facilities
- State-of- the art technology
- Automated logistic operator
- Quality certifications

PROJECT MANAGEMENT AND EXECUTION

- Project planning and coordination
- Installation of complete solution
- On site Project Manager
- After sale support



YOUR WATER SOLUTION PARTNER

Working with Fluidra, specialized in water projects and manufacturing of all the necessary equipment, is a safe and attractive option. With Fluidra, you have a specialist at your disposal as a single point of contact throughout the process. This makes the planning and implementation of tailor-made solutions easier, while ensuring the respect of the deadlines and the budget estimations.

“More than 50 years of history”

MULTIDISCIPLINARY

R+D+I center that focuses on sustainable solutions.

MANUFACTURING

37 Manufacturing sites in key markets

LOGISTICS

Logistics operators to ensure fast and reliable deliveries.

DISTRIBUTION

136 points of sale, giving support and training to professional clients in 46 countries.

ENGINEERING

Design and engineering of water projects.

INSTALLATIONS

More than 1,5m private and public completed projects.







RESEARCH

We promote a culture of innovation with enthusiasm and creativity in order to meet new challenges

R&D&I is the foundation of our competitiveness. Using the cleanest and most efficient technologies possible, along with developing products based on the environmentally sustainable use of water, are the main focus of the Group's innovation policy.

ASTRALPOOL

OUR PROJECTS

Dream. Do. Grow.

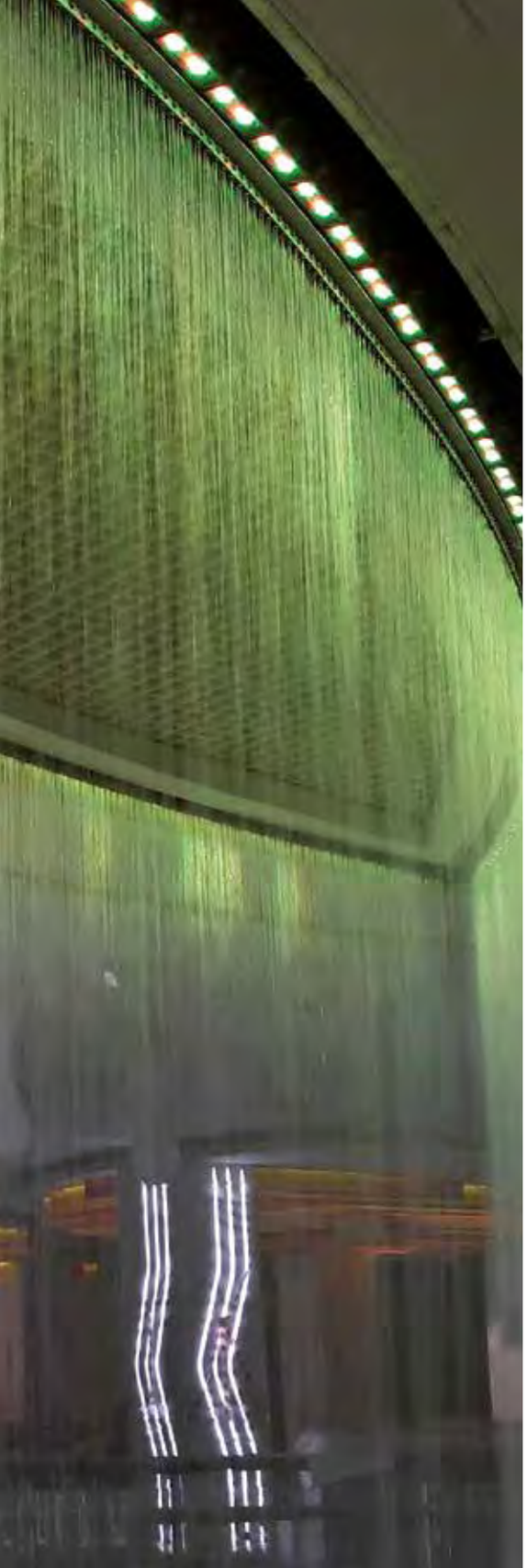












ASTRALPOOL







In ASTRALPOOL we have worked with some of the most worldwide know Architecture offices, collaborating in the design of the fountains, creating new products and adapting the technologies in order to find solutions for each project.

We have participated in all the stages of the project, from the fist thought and design, to the basic and executive projection of the fountain, the manufacturing, supervision/ installation, commissioning and choreography to get the best results.

I would like us to attach importance to things again


ASTRALPOOL

PROJECT /

Great Exhibition of the North

– Newcastle, United Kingdom







Great Exhibition od the North

PROJECT /

Kashirskaya – Mocow, Russia





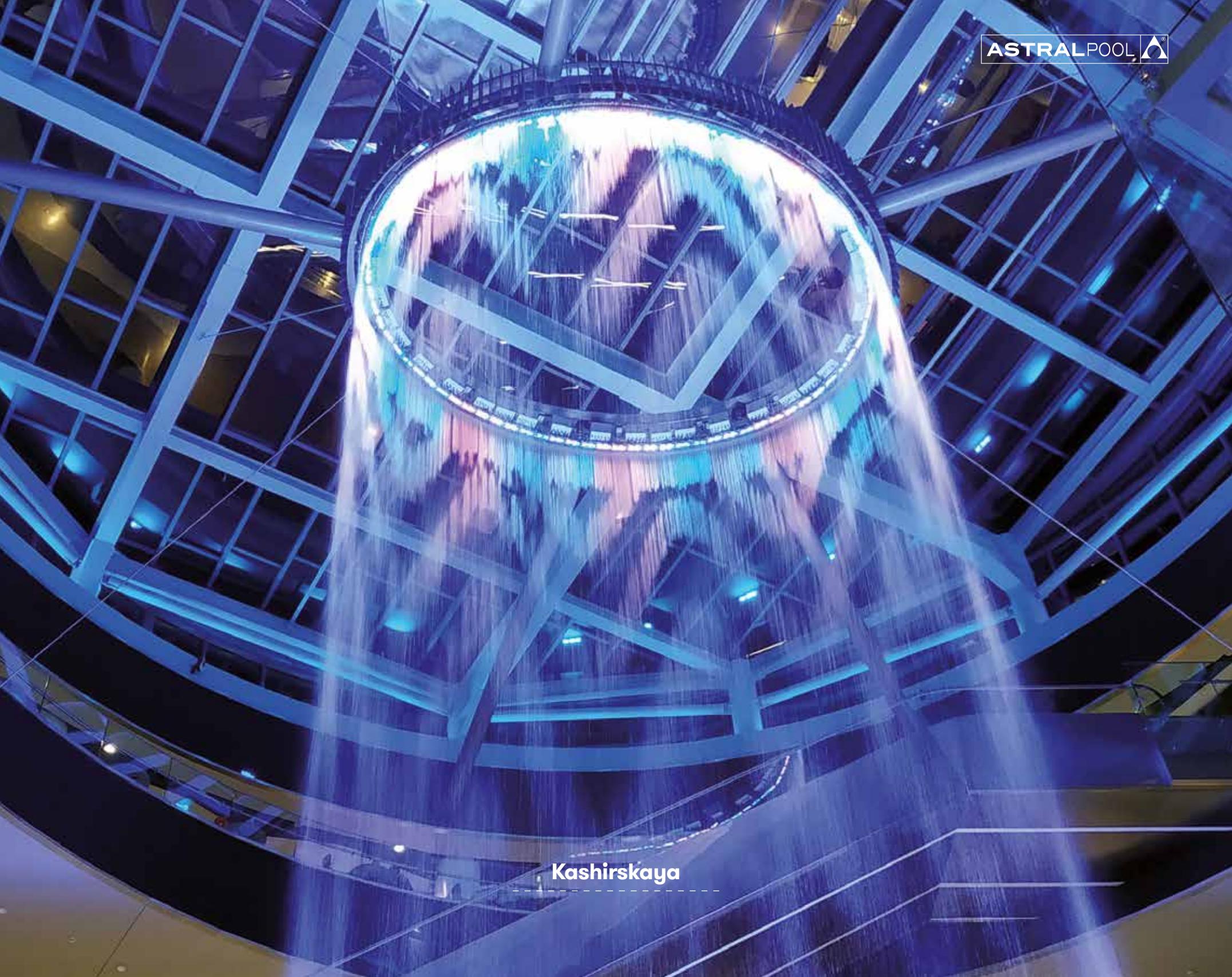
ASTRALPOOL
Kashirskaya

PROJECT /

Vadi Istanbul – Istanbul, Turkey





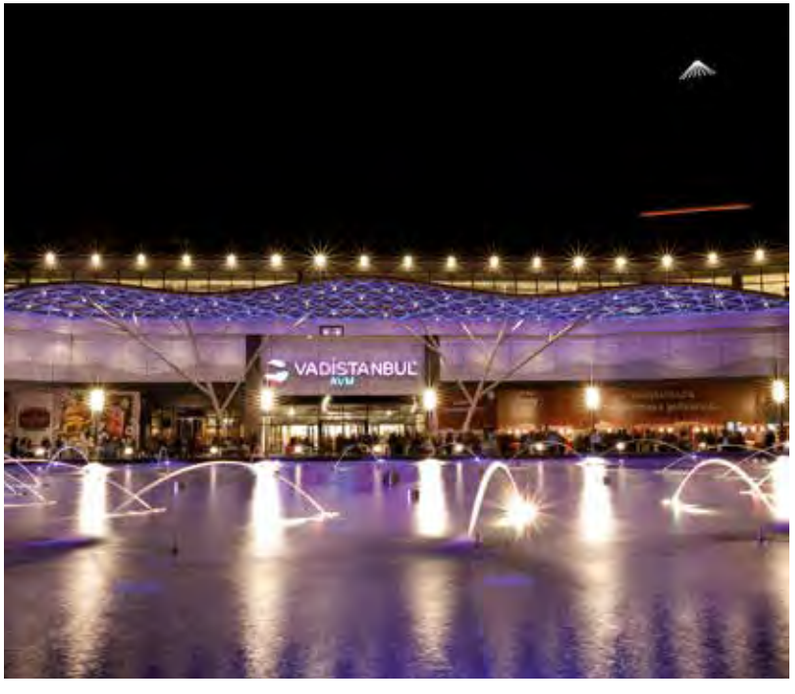



Vadi Istanbul

PROJECT /

Central Park – Almaty, Kazakhstan







Central Park

PROJECT /

The Harbor Merida – Merida, Mexico

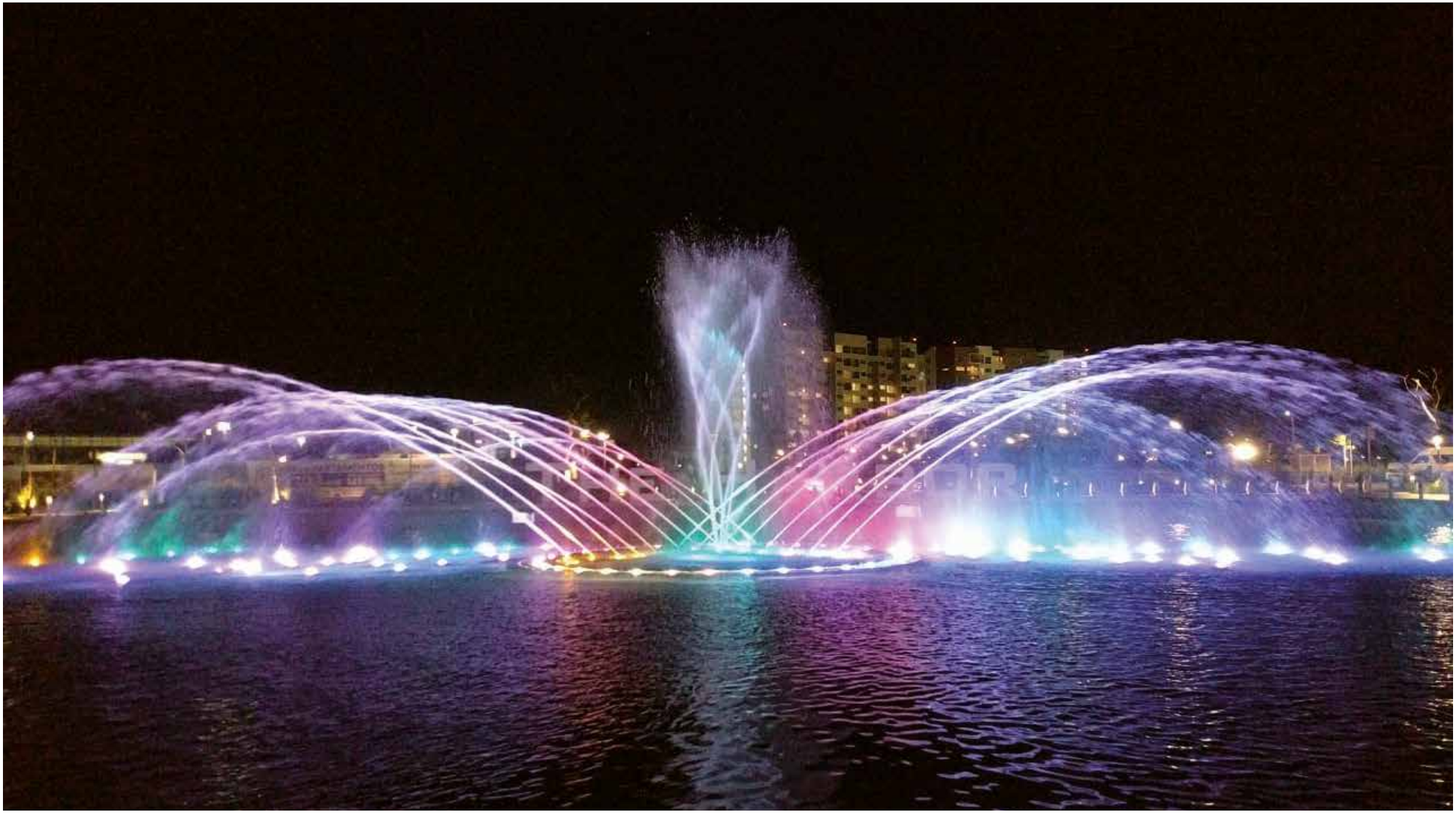





The Harbor Merida

PROJECT /

Isataya Square – Atyrau, Kazakhstan







Isataya Square

Funsquare in Lodz – Lodz, Poland







Funsquare in Lodz

PROJECT / **Nazarbaev Street Funsquare** – Almaty, Kazakhstan







Nazarbaev Street Funsquare

PROJECT /

Boscolo Airone Hotel – Venice, Italy







Boscolo Airone Hotel

PROJECT /

Nazarbaev
Street Vessel Fountain – Almaty, Kazakhstan

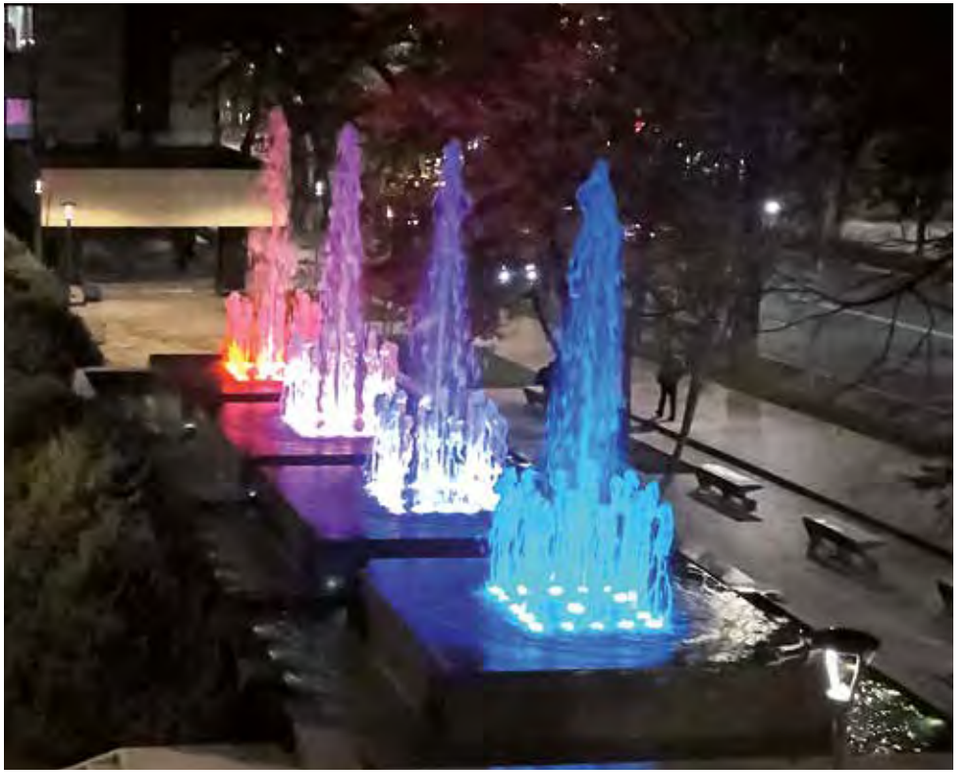





Nazarbaev Street Vessel Fountain

PROJECT /

Almaty Shell Fountains – Almaty, Kazakhstan





Almaty Shell Fountains

PROJECT /

Astana Expo 2017 – Astana, Kazakhstan











Astana Expo 2017

PROJECT /

Gravellona Toce – Verbano-Cusio-Ossola, Italy







Gravellona Toce

PROJECT /

Souq Waqif Funsquare – Doha, Qatar

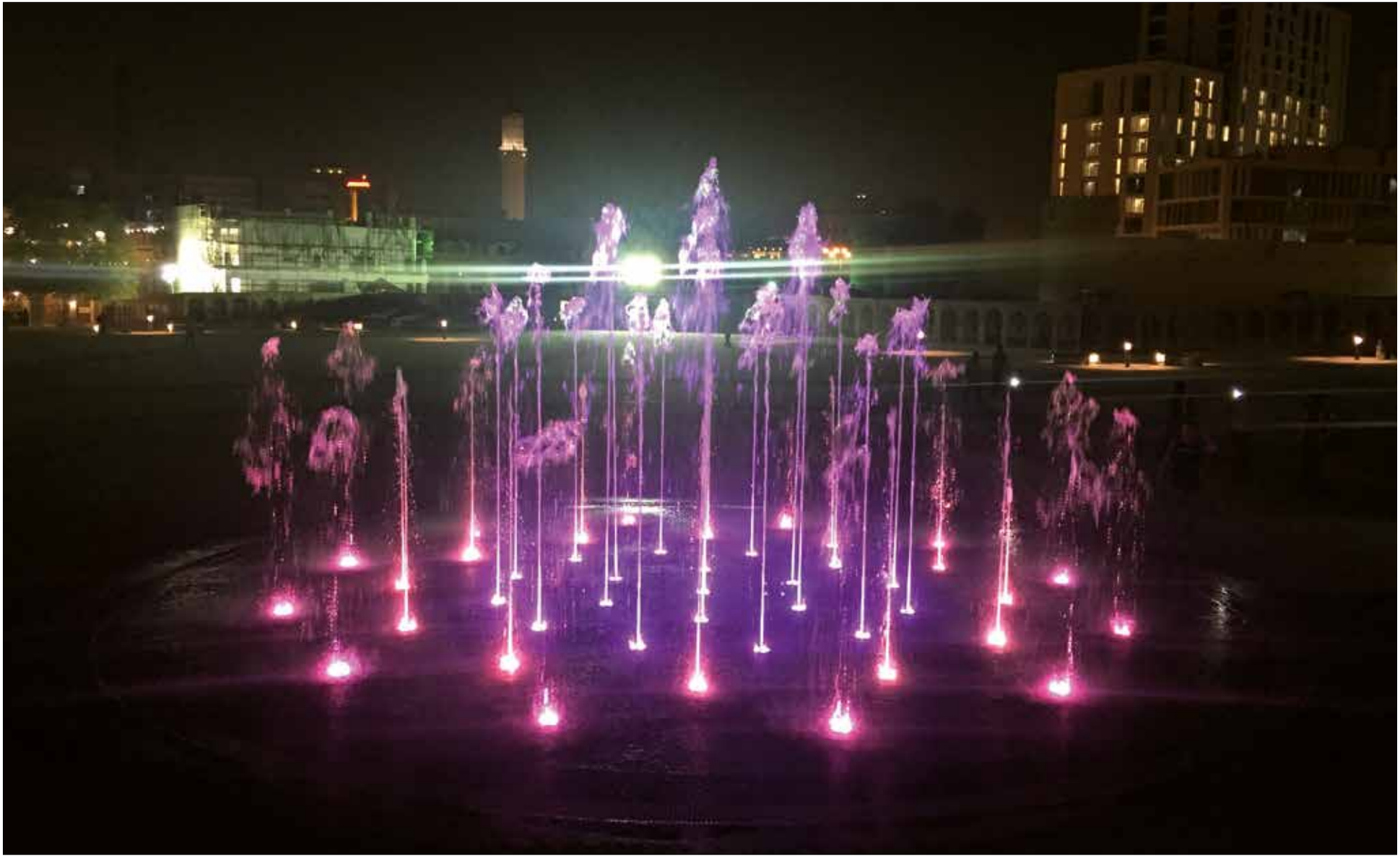

ARCHITECT / GHARNATA CONSULTANT ENGINEERS



Souq Waqif Funsquare

Gharnata Consultant Engineers

PROJECT /

Mega Silk Way – Astana, Kazakhstan







Mega Silk Way

PROJECT /

La Pedrera Park – San Luis, Argentina











La Pedrera Park

PROJECT /

Style Outlets Viladecans – Barcelona, Spain



ARCHITECT / BATLLE I ROIG ARQUITECTES









Style Outlets Viladecans

Batlle i Roig Arquitectes

PROJECT /

Moremall Fountain – Sochi, Russia



ARCHITECT / PAVEL KAMYSHNIKAU







Moremall Fountain

Pavel Kamyshnikau

PROJECT /

Catalonia Square Fountains – Barcelona, Spain





ARCHITECT / CARLES BUÏGAS









Catalonia Square Fountains

Carles Buïgas

PROJECT /

Timisoara Sunsquare – Timisoara, Romania









PROJECT /

Panama City – Panama







ARCHITECT / GUILLERMO SALINAS

PROJECT /

Ciudad de los Niños Park – Almeria, Spain



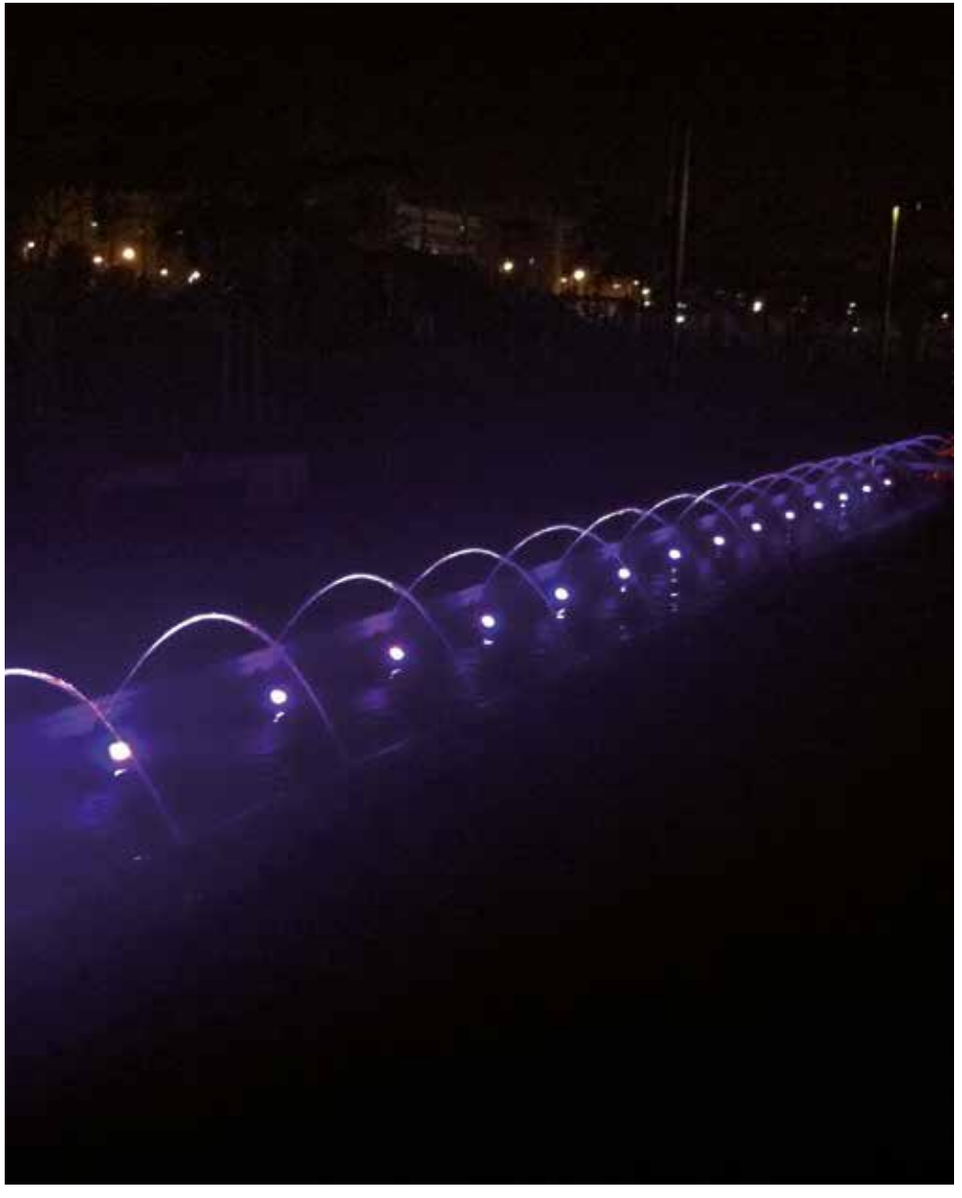

ARCHITECT / INTEGRA ARQUITECTURA



Ciudad de los Niños Park

Integra Arquitectura

PROJECT /

Park de les Rieres d'Horta Funsquare

Barcelona, Spain









ARCHITECT / CARLES CASAMOR



Park de les Rieres d'Horta Funsquare

Carles Casamor

PROJECT /

Plaisance-du-Touch Funsquare – Toulouse, France



PROJECT /

Taman Anggrek Funsquare – Jakarta, Indonesia







PROJECT /

Slavyansky Shopping Mall – Moscow, Russia





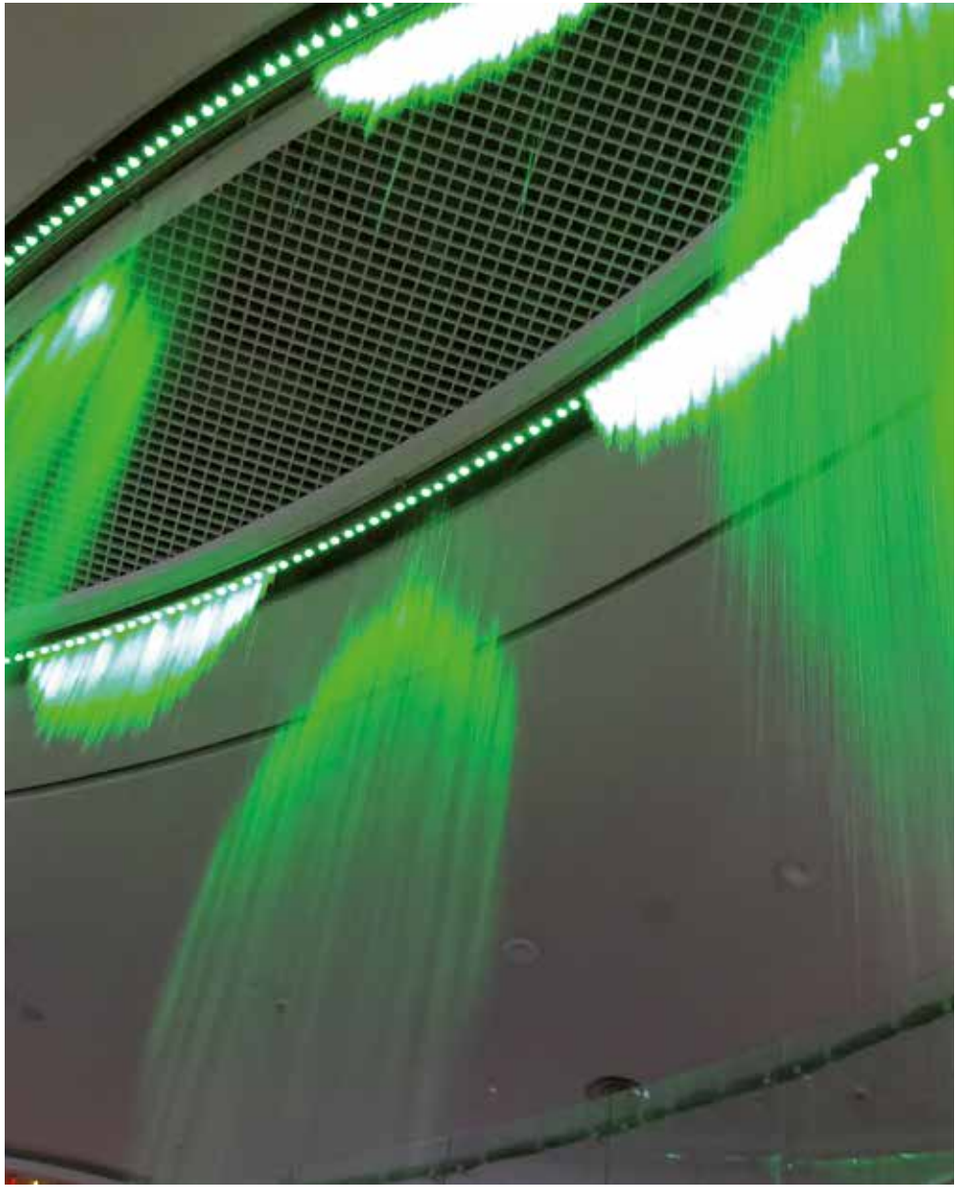

ARCHITECT / PAVEL KAMYSHNIKAU



Slavyansky Shopping Mall

Pavel Kamyshnikau

PROJECT /

Baku Geyser (140 m) – Baku, Azerbaijan







Baku Geyser (140 m)

PROJECT /

Shamkir Park – Shamikir, Azerbaijan



ARCHITECT / MDM GROUP



Shamkir Park

MDM Group

PROJECT /

Puerto Venecia – Zaragoza, Spain









ARCHITECT / L35 ARCHITECTS



Puerto Venecia

L35 Architects

PROJECT /

Yeni Hayat Mall – Baku, Azerbaijan







ARCHITECT / TASARIM MIMARLIK

PROJECT /

Diagonal Mar Park – Barcelona, Spain

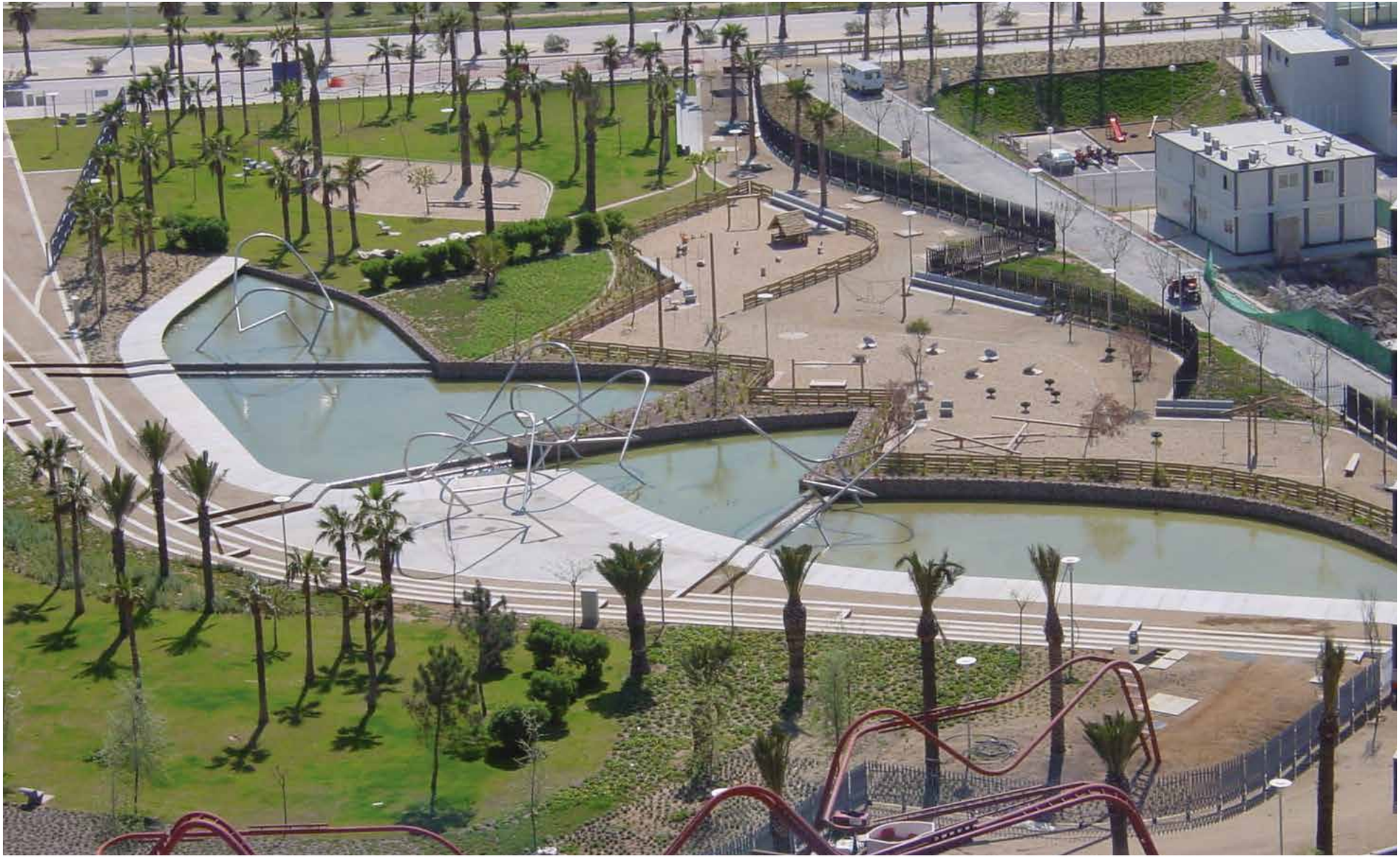

ARCHITECT / ENRIC MIRALLES

PROJECT /

Zenia Boulevard – Orihuela, Spain







ARCHITECT / RTKL ARCHITECTS

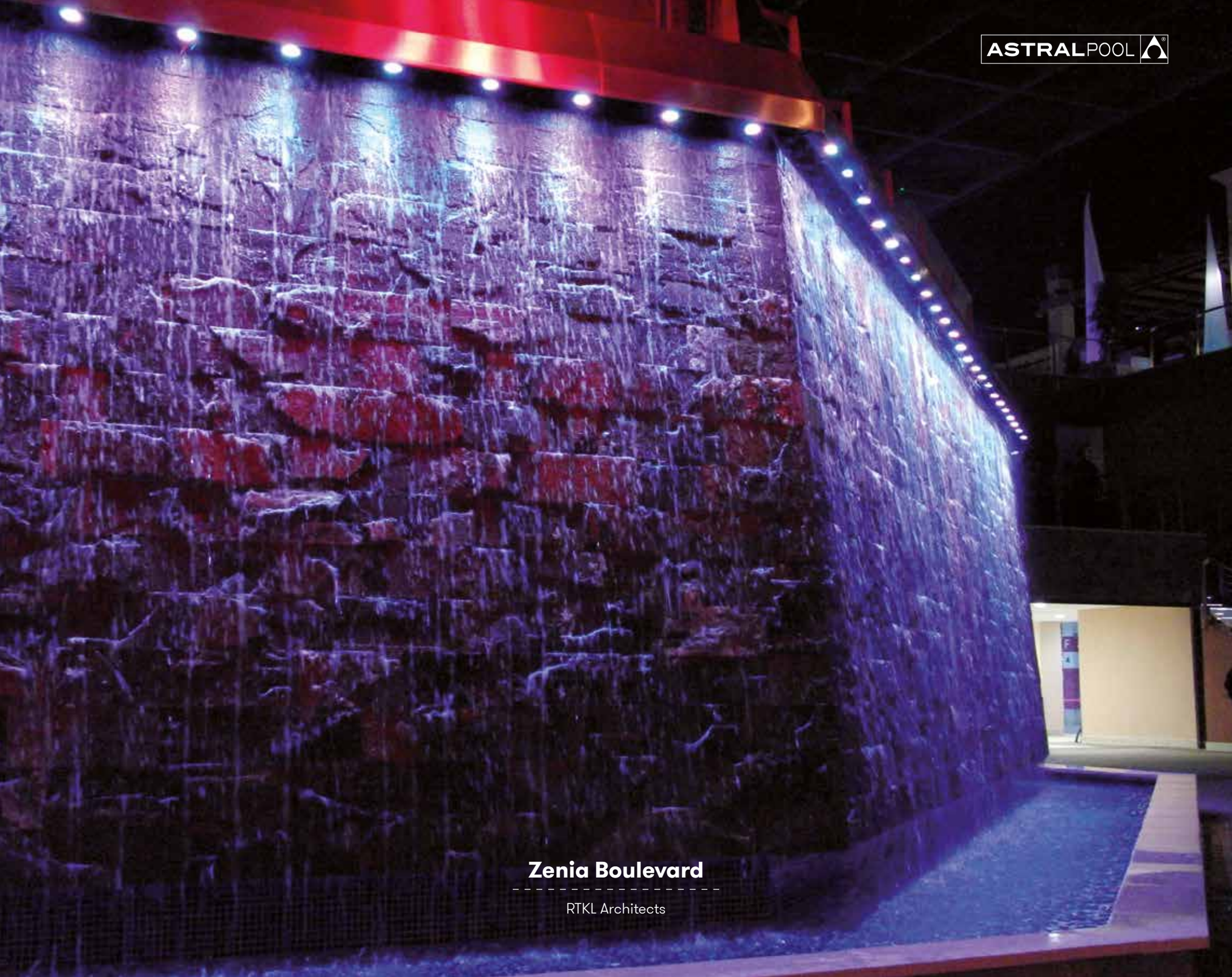

Zenia Boulevard

RTKL Architects

PROJECT /

Madrid Rio Fountains – Madrid, Spain



ARCHITECT / WEST 8 ARCHITECTS



Madrid Rio Fountains

West 8 Architects

PROJECT /

La Pegaso Park – Barcelona, Spain







La Pegaso Park

PROJECT /

España Industrial Park – Barcelona, Spain

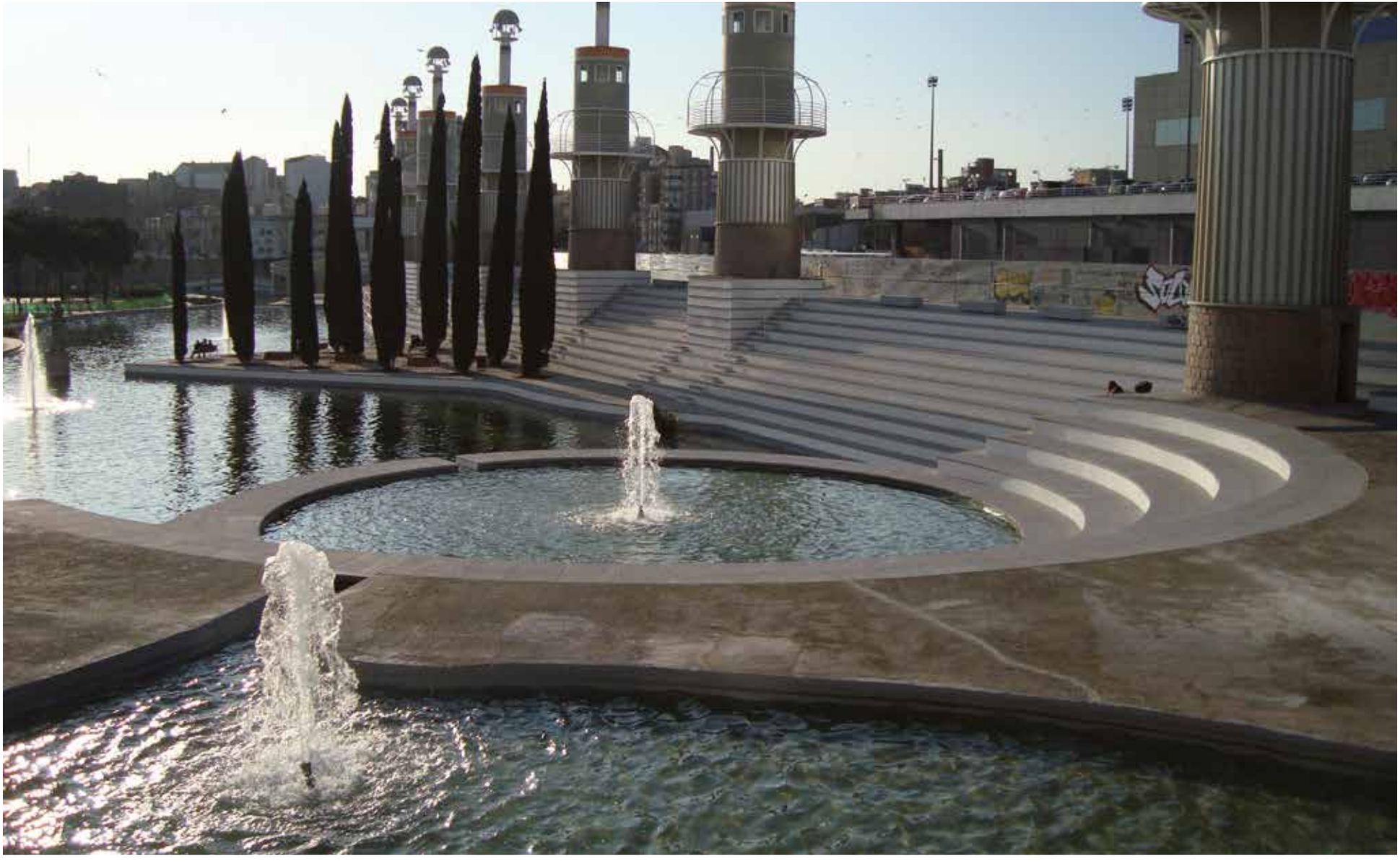



España Industrial Park

PROJECT /

Fira de Barcelona Fountains – Barcelona, Spain



ARCHITECT / TOYO ITO



Fira de Barcelona Fountains

Toyo Ito

PROJECT /

Barris Central Park – Barcelona, Spain







ARCHITECT / ARRIOLA&FIOL ARCHITECTS



Barcelona Parc Central

Arriola&Fiol Architects

PROJECT /

Constitution Square – Lleida, Spain






Constitution Square

PROJECT /

France Square – Lleida, Spain



PROJECT /

Central Square – Dimitrovgrad, Bulgaria









PROJECT /

La Pau Square – Lleida, Spain



ARCHITECT / CARLES BUÏGAS

PROJECT /

La Roca Village Mall – Barcelona, Spain







ARCHITECT / L35 ARCHITECTS

PROJECT /

Sant Adria de Besos Funsquare

Barcelona, Spain







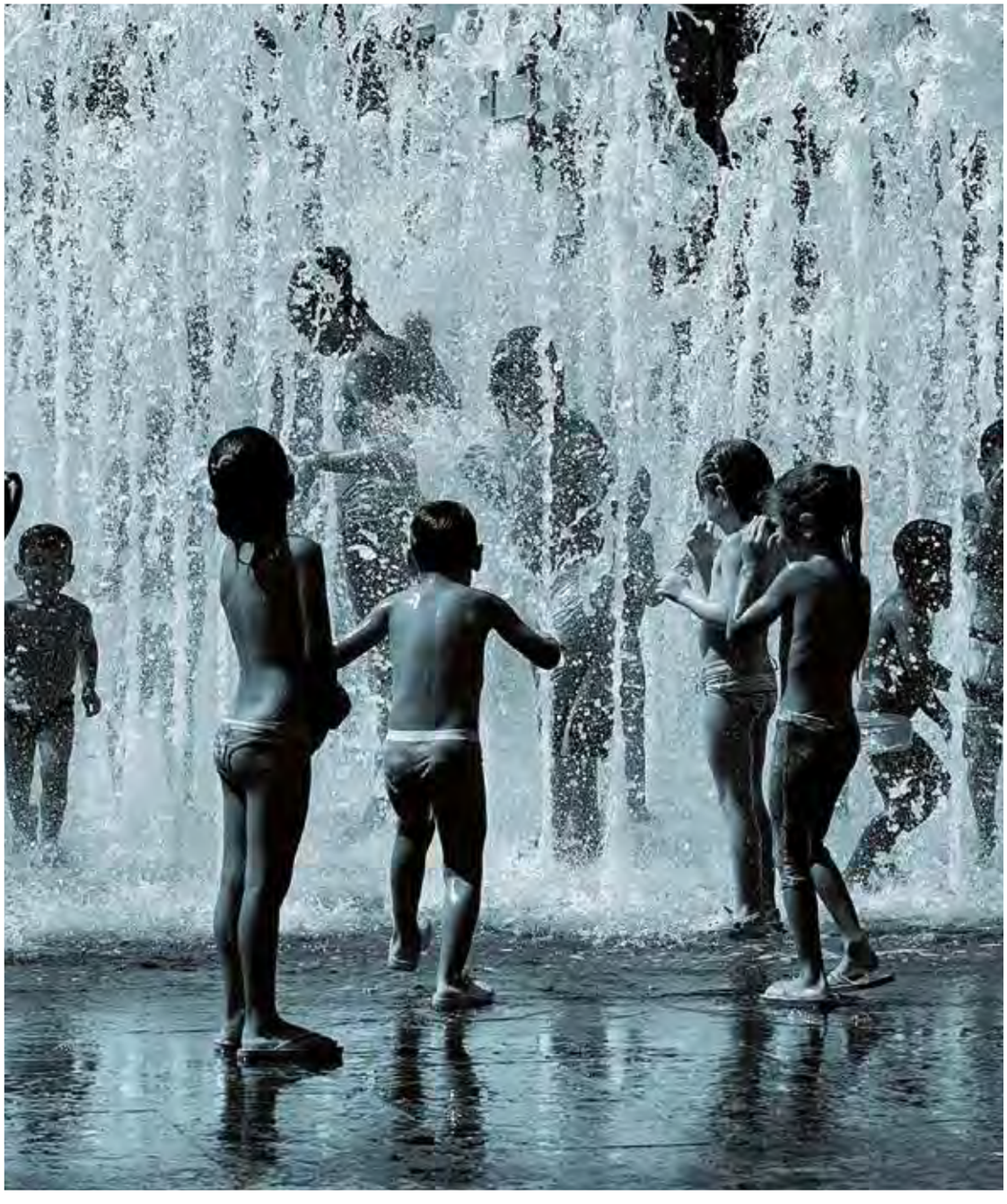

Sant Adria de Besos Funsquare

PROJECT /

Gran Via Waterfall – Barcelona, Spain

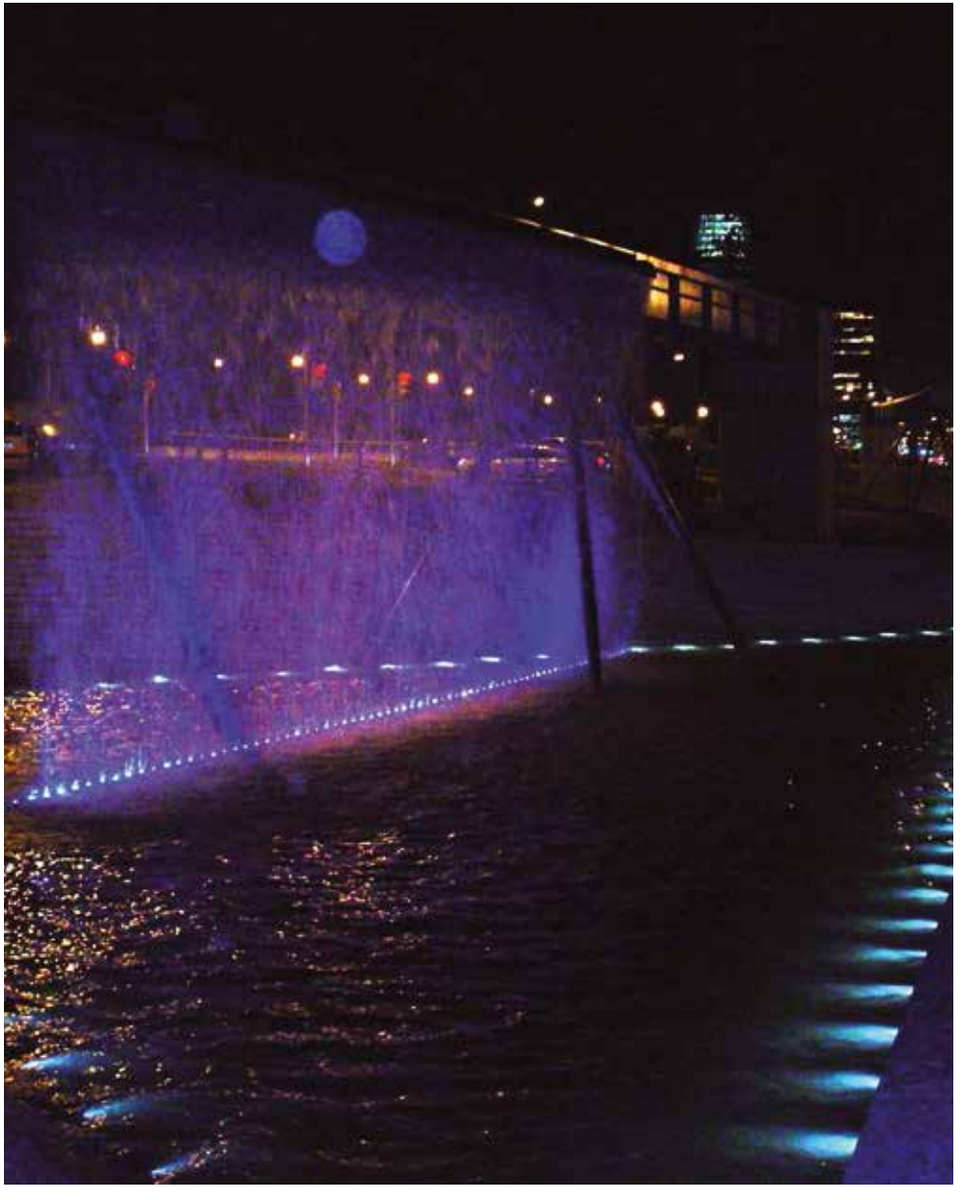

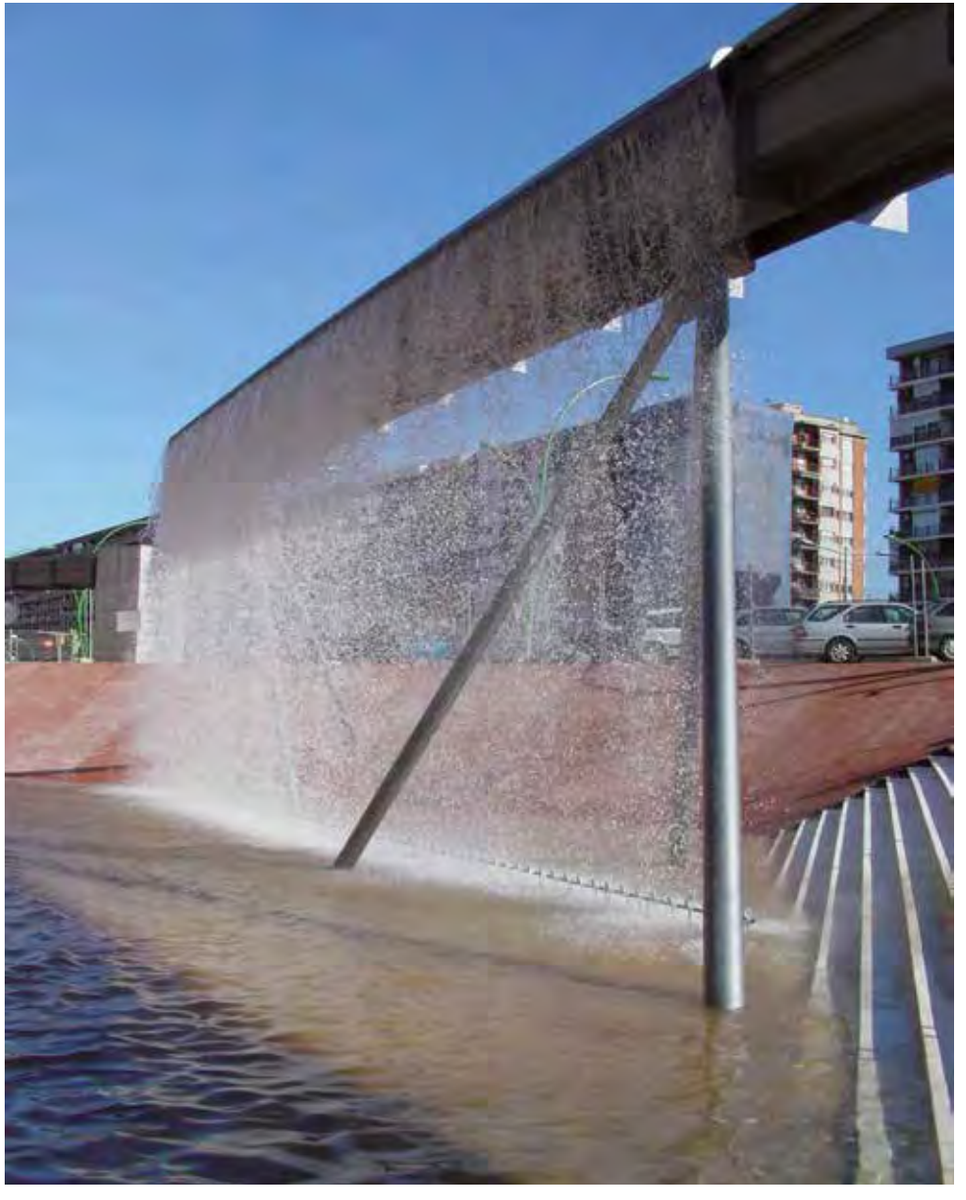

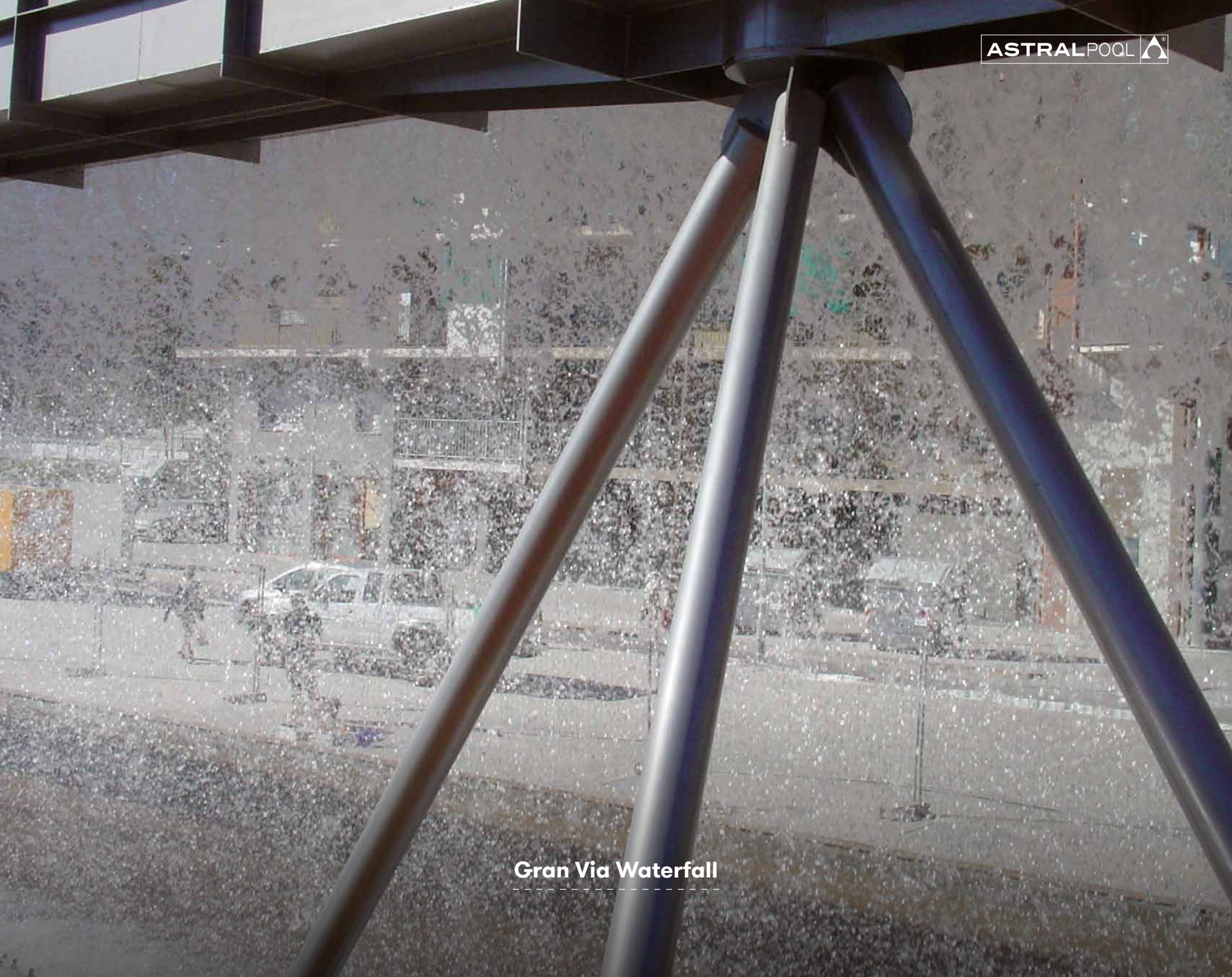

Gran Via Waterfall

PROJECT /

Lesseps Square – Barcelona, Spain





PROJECT /

Sant Julià de Ramis Funsquare

Sant Julià de Ramis, Spain









PROJECT /

Torre Agbar Waterfalls – Barcelona, Spain



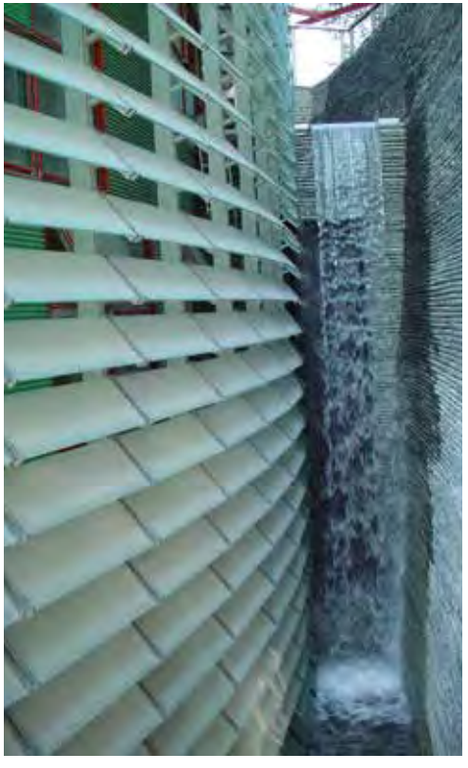



ARCHITECT / **JEAN NOUVEL**

PROJECT /

Rehabilitations of Classical Fountains










PRODUCT DETAILS

Discover them all.

* We reserve the right to change product features and the contents of this document without prior notice.

CUSTOMIZABLE FOUNTAINS
DIGITAL CURTAIN



* Product Upon Request

Historically, murals have been a way of representing all kind of elements. Through a combination of water and light, these representations will be given a new meaning in an innovative and interactive way.

The effect introduces new technologies able to represent shapes instantly by interacting with a tablet device. A multitude of geometric combinations, organic figures and texts have their place within the concept of an interactive curtain, where you can draw and create anything you want using water and light.

Due to the force of gravity, it is important to highlight that the recommended height is lower than 4 meters. The Digital Curtain is perfect for advertising.

DIGITAL CURTAIN Code: 66548	
Dimensions (L x W x H) [mm]	1035 × 390 × 393 (standard)
Nominal Voltage [V]	230 VAC
Light type	RGB+W - DMX
Light power consumption [W/m]	52
Total power consumption [W/m]	240 (without pump)
Power rating[A]	1,1
Recommended pressure [bar]	0,5
Curtain flow [(m3/h)/m]	4
Recommended height[m]	≤ 4
Control system	Watercurtain Manager Software
Material	AISI 316 / Brass / Others
Weight without water [kg/m]	58 kg/m
Weight with water [kg/m]	73 kg/m
Protection class	IP 66

PROJECT VIEW



DIGITAL CURTAIN

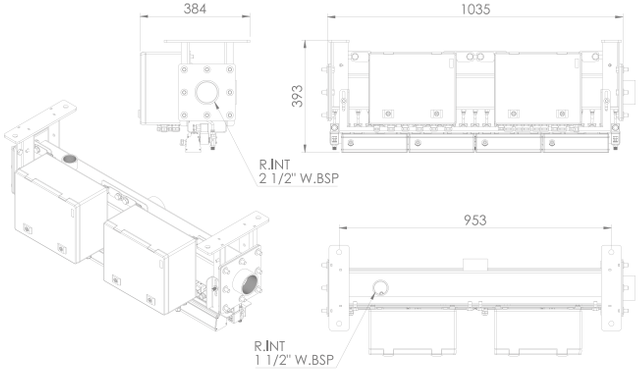

This exclusive application for tablets and mobile phones allows complete and real-time interaction with the digital curtain (66548).

Through the application, the user can send text, existing images of the preprogrammed gallery or even create new pictures.

It is available for Android and iOS devices.

DIGITAL CURTAIN APP Code: 66549	
Curtain connection	WIFI
Availability in Android	YES
Availability in iOS	YES





PROJECT VIEW



CUSTOMIZABLE FOUNTAINS

FUNSQUARE



Designed to be a fun area for the whole family, Funsquare comprises numerous high-speed, interactive vertical jets. It performs a sequence of ornamental and dancing effects that seem to be totally random. Wherever the Funsquare is located, it attracts people.

This effect not only seems to bring water and light to life, but the music also plays a key role creating magical dances. There are a number of sensors, such as weight, presence and pressure sensors, as well as ropes and cameras, all of which add even more interactivity and variations to the water features. Ask us about them!

FUNSQUARE	
Dimensions (L x W x H) [m]	4 × 4 × 0,6 others upon request
Light type	RGB - DMX
Light nominal voltage [V]	24 VDC
Pumps nominal voltage [V]	230 VAC
Power [W]	Depending on the size
Jet diameter [mm]	10 - 19
Maximum jet height [m]	4
Light control	DMX
Funsquare control system	DMX / PLC
Material	AISI 316 stainless steel/Others
Weight [kg]	Depending on the size
Protection class	IP 68

PROJECT VIEW





FUNSQUARE

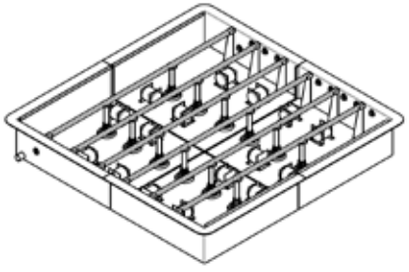

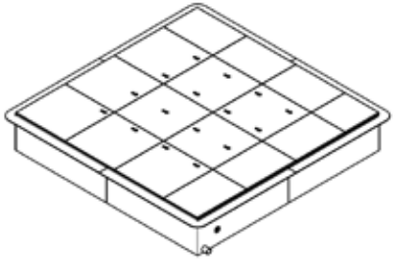

This ornamental effect creates a large screen of water that serves as a perfect surface on which to project videos and other images. The Water Screen is big enough to project a standard panoramic HDTV image (16:9).

The combination of this decorative feature with a video or laser projector will create a visually impressive effect.

WATER SCREEN Code: 66550	
Dimensions (L x W x H) [mm]	925 × 518 × 803
Inlet connection	Flange DN150
Screen dimensions range [m]	24 × 8 - 48 × 16
Flow range [m3/h]	110 - 260
Pressure range [bar]	6 - 12
Maximum water depth [mm]	530
Material	Stainless steel 316
Weight [kg]	94

CUSTOMIZABLE FOUNTAINS
WATER SCREEN



WATER SCREEN

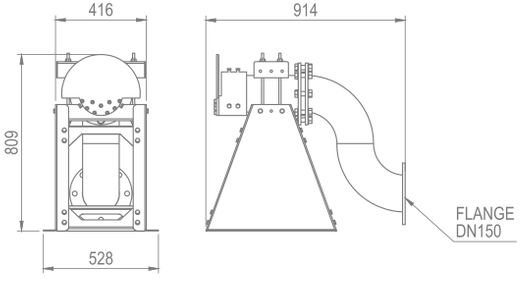

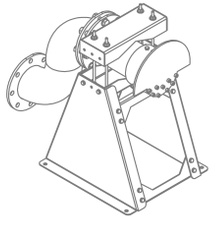

PROJECT VIEW





CUSTOMIZABLE FOUNTAINS

WATER CURTAIN



* Product Upon Request

This ornamental effect creates a large screen of water that serves as a perfect surface on which to project videos and other images. The Water Curtain is big enough to project a standard panoramic HDTV image (16:9).

The combination of this decorative feature with a video or laser projector will create a visually impressive effect.

WATER CURTAIN Code: 66551	
Dimensions (L x W x H) [mm]	1000× 140 × 114 (standard)
Recommended pressure [bar]	0,5
Curtain flow per m [m3/h]	4
Recommended height [m]	≤ 4
Material	AISI 316 stainless steel/Brass
Weight without water [kg/m]	15 kg/m
Weight with water [kg/m]	20 kg/m

PROJECT VIEW





WATER CURTAIN

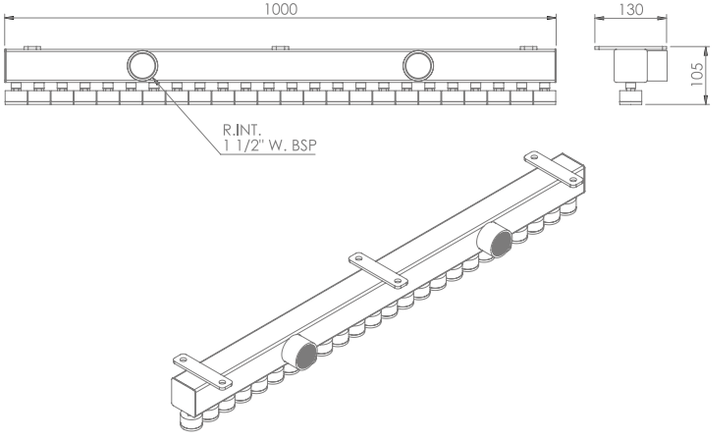

This ornamental effect creates a large screen of water that serves as a perfect surface on which to project videos and other images.

It incorporates RGB+W LED lighting with individual control of four LED lights each meter of water curtain, through DMX protocol.

The combination of the waterfall with integrated lighting will create a visually impressive effect.

WATER CURTAIN WITH LINEAR LED	Code: 73346
Dimensions (L x W x H) [mm]	1042 × 164 × 114 (standard)
Nominal Voltage [V]	24 VDC
Light type	RGB+W - DMX
Power consumption [W/m]	52
Recommended pressure [bar]	0,5
Curtain flow per m [m3/h]	4
Recommended height [m]	≤ 4
Material	AISI 316 stainless steel/Brass
Weight without water [kg/m]	18 kg/m
Weight with water [kg/m]	23 kg/m



WATER CURTAIN WITH LINEAR LED

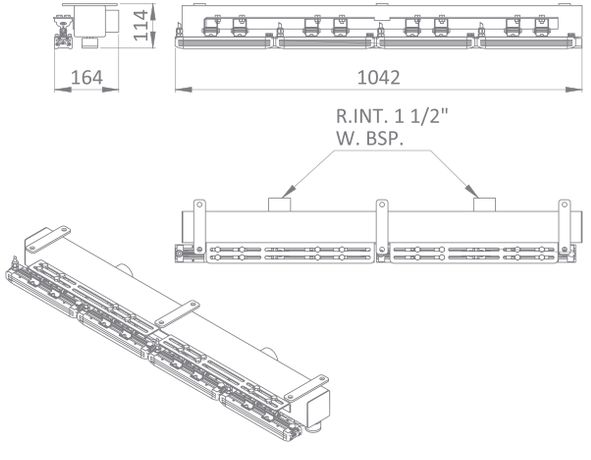

PROJECT VIEW



CUSTOMIZABLE FOUNTAINS

WATERFALL



This ornamental feature produces a continuous waterfall. As a result, it makes the gentle, calming sound of the waves on the beach. It can be installed both indoors and outdoors.

Its cutting-edge design creates a perfectly uniform film of water along the whole cascade.

It is made of AISI 316 stainless steel to ensure maximum resistance to rust and to give it a high quality finish.

It is possible to enhance the ornamental effect by adding a lighting system.

WATERFALL Code: 66552	
Dimensions (L x W x H) [mm]	2000 × 385 × 296 standard, others on request
Fall pressure (max.) [bar]	0,5 (low pressure recommended)
Flow per m [(m3/h)/m]	12,5 (e=15mm)
Maximum flow [(m3/h)/m]	30
Material	AISI 316 stainless steel
Weight [kg]	25

PROJECT VIEW





WATERFALL

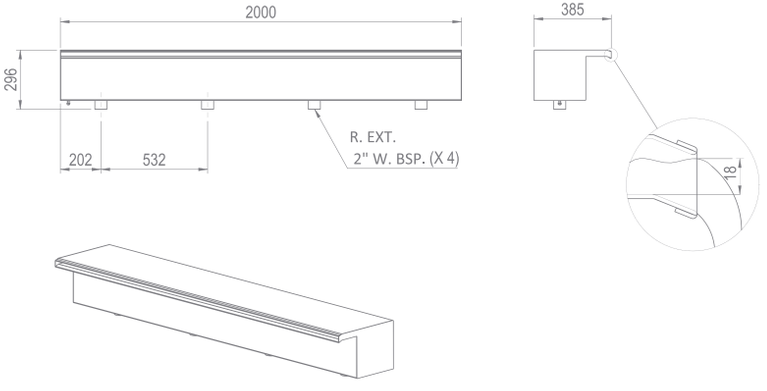

A large water jet, both impressive and imposing, is the effect you get with a Geyser. As if it were a natural geyser, a large amount of water is pumped up at a high altitude to form part of the skyline.

Combined with the appropriate lighting system, the Geyser is a great visual image that can be seen from great distances, thus becoming a landmark in the landscape.

This ornamental fountain can be placed in freshwater, seawater and in the open sea on a fixed or floating structure.

GEYSER JET	
Dimensions (L x W x H) [m]	Depending on the size
Nominal voltage [V]	400 VAC
Power [W]	Depending on the size
Jet diameter [mm]	Upon request
Jet height [m]	Upon request
Material	AISI 316 stainless steel
Weight [kg]	Depending on the size
Protection rating	IP 68

CUSTOMIZABLE FOUNTAINS
GEYSER JET

ASTRALPOOL

* Product Upon Request

GEYSER JET

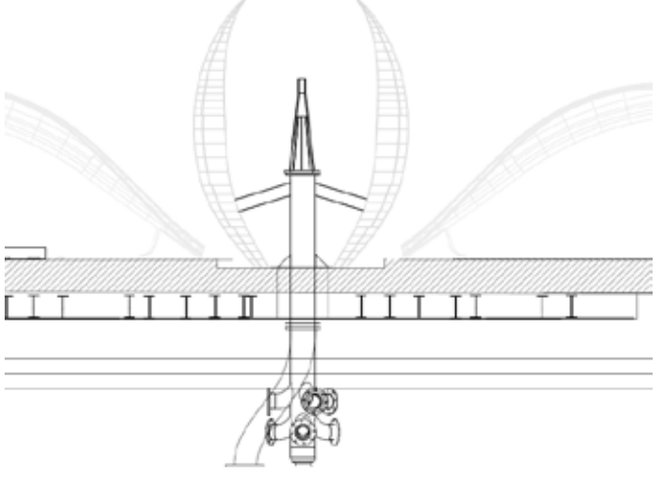

PROJECT VIEW





CUSTOMIZABLE FOUNTAINS

NEW DESIGN

PLUG & PLAY

The Plug and Play fountain kit let you have a small complete fountain into your garden.

It combines comfort, design and energy efficiency in a easy and quick product to install.

It comes with 10 meter cable, a nozzle and a multicolor RGB light included. The nozzle can be replaced by any other nozzle of our plug and play series to configure the fountain to your preference.

The highly efficient RGB LED with color changing sequence brings color into the pond.

The jet height is adjustable up to 3.5 meters, according to the installed nozzle.

PLUG & PLAY	66979 KIT SPEAR D12	66980 KIT FOAMY 35	66981 KIT VULCANO	66982 KIT MUSHROOM
Dimensions (L x W x H) [mm]	281 × 218 × 390	281 × 218 × 434	281 × 218 × 354	281 × 218 × 565
Connection	1" G	1" G	1" G	1" G
Nozzle material	Stainless Steel 304	Plastic / Stainless Steel 304	Stainless Steel 316	Stainless Steel 316
Pump	24 VDC / 105 W (Power supply included)	24 VDC / 105 W (Power supply included)	24 VDC / 105 W (Power supply included)	24 VDC / 105 W (Power supply included)
LED lighting	12 VAC / 4 W (Transformer/ select button included)	12 VAC / 4 W (Transformer/ select button included)	12 VAC / 4 W (Transformer/ select button included)	12 VAC / 4 W (Transformer/ select button included)
Max. Height	2,5 m	1 m	2 m	1 m (Diameter)

PLUG & PLAY

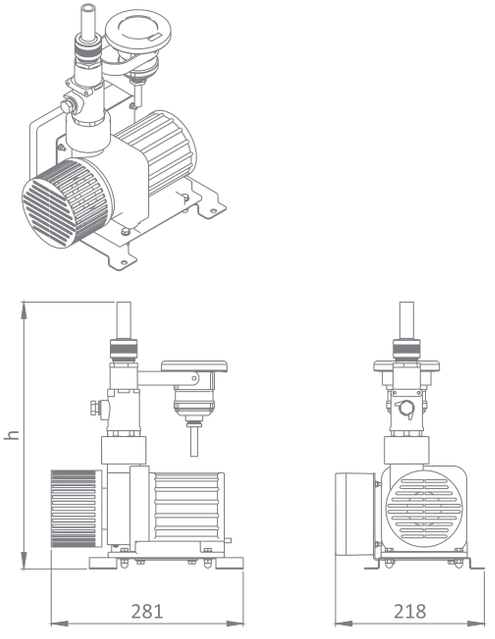



Plug & Play

Customizable Fountains

PROJECT VIEW

66979 PLUG & PLAY KIT SPEAR



66982 PLUG & PLAY KIT MUSHROOM



66981 PLUG & PLAY KIT VULCANO



66980 PLUG & PLAY KIT FOAMY



CUSTOMIZABLE FOUNTAINS

DMX VARIABLE PUMP S

NEW PRODUCT



The DMX Variable Pump S allows to control the jet heights individually, creating a multitude of effects and figures in dynamic fountains. It is ideal to be installed just below the Spear Nozzle between 12 and 14 mm and Foamy Nozzles.

The device incorporates the height variation system through DMX protocol, what facilitates the control of the jets and reduces considerably the size and cost of electrical cabinets

DMX VARIABLE PUMP S Code: 67410	
Dimensions (L x W x H) [mm]	254 × 97 × 121
Nominal voltage [V]	24 VDC
Power [W]	100
Power raring [A]	4,2
Hydraulic connection	1-1/2" G
Minimum water depth [mm]	200
Maximum pressure [m]	5
Maximum flow [l/min]	160
Dynamic response 0-100% [s]	1
Starts per minute (max.)	6
Control system	DMX-RDM
Weight [kg]	2

DMX VARIABLE PUMP S

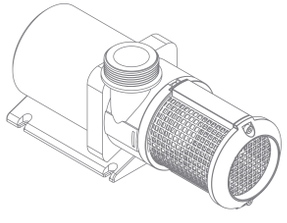

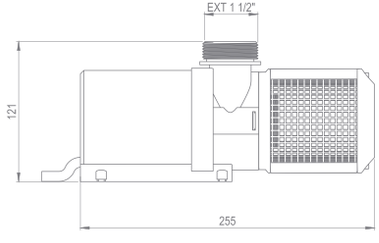

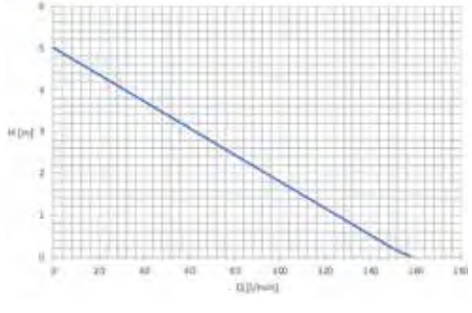

PROJECT VIEW





The DMX Variable Pump allows to control the height of the jets individually, creating a multitude of effects and figures in dynamic fountains. It is ideal to be installed just below the Spear Nozzle between 12-20 mm and Foamy Nozzles.

The device incorporates the height variation system of variation through DMX protocol, what facilitates the control of the jets and reduces considerably the size and cost of the electrical cabinets.

DMX VARIABLE PUMP L Code: 67411	
Dimensions (L x W x H) [mm]	500 × 366 × 239
Nominal voltage [V]	220 - 240 VAC
Power [W]	720
Power raring [A]	3,7
Hydraulic connection	1-1/2" G
Minimum water depth [mm]	300
Maximum pressure [m]	11
Maximum flow [l/min]	320
Dynamic response 0-100% [s]	1
Starts per minute (max.)	6
Control system	DMX (1 channel)
Material	Stainless steel
Weight [kg]	23

DMX VARIABLE PUMP L

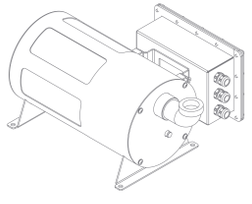

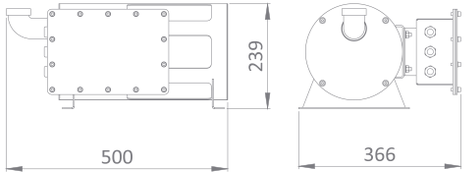

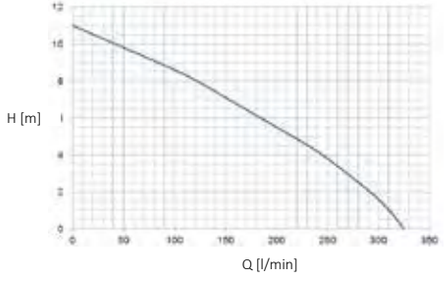

CUSTOMIZABLE FOUNTAINS

DMX VARIABLE PUMP L

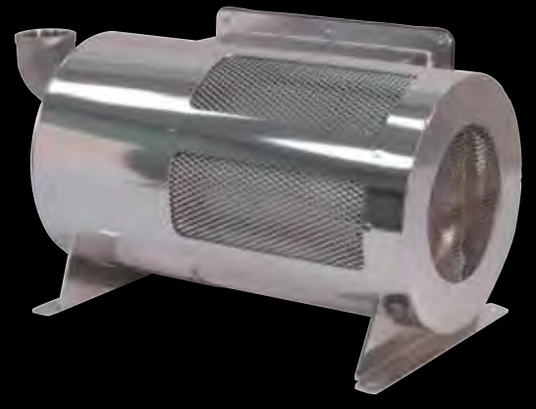

PROJECT VIEW





SPEAR NOZZLE

Big Spear Nozzle is a nozzle designed for ornamental fountains with great height jets.

Those are entirely made of AISI 316 stainless steel, which provides high sturdiness and oxidation resistance, and provides a stylish finish to the fountain. They can be made of brass material on request.

It has a 10⁰ adjustable joint to correct the jet outlet in case of misalignment of manifolds or pipes.

NOZZLE	SPEAR NOZZLE 4		SPEAR NOZZLE 6		SPEAR NOZZLE 8		SPEAR NOZZLE 10		SPEAR NOZZLE 12		SPEAR NOZZLE 14		SPEAR NOZZLE 16		SPEAR NOZZLE 20	
Code	67496		66639		66640		66641		66642		66643		66644		66645	
Inlet	G 3/8" M		G 3/8" M		G 1/2" M		G 1/2" M		G 1" M		G 1" M		G 1-1/2" M		G 1-1/2" M	
Jet diameter	Ø 4 mm		Ø 6 mm		Ø 8 mm		Ø 10 mm		Ø 12 mm		Ø 14 mm		Ø 16 mm		Ø 20 mm	
Dimensions ØCxB	Ø21×52 mm		Ø21×52 mm		Ø24×76 mm		Ø24×76 mm		Ø36×111 mm		Ø36×111 mm		Ø61×167 mm		Ø61×167 mm	
Jet height [m]	l/min	m	l/min	m	l/min	m	l/min	m	l/min	m	l/min	m	l/min	m	l/min	m
0,5	2,4	0,6	4,9	0,6	9,6	0,7	15,8	0,8	25,4	1,0	31	0,9	46	1,0	70	1,2
0,75	2,9	1,0	6,1	0,9	11,6	0,9	19,3	1,1	30,2	1,3	38	1,2	55	1,3	80	1,3
1	3,4	1,2	7,2	1,2	13,3	1,3	21,9	1,4	33,6	1,5	44	1,4	62	1,5	87	1,5
1,25	3,8	1,5	8,5	1,4	15,9	1,6	24,8	1,7	39,0	2,0	51	1,8	70	1,9	95	1,8
1,5	4,2	1,8	9,6	1,7	17,1	1,8	27,8	2,0	40,9	2,1	55	2,1	76	2,1	104	2,1
1,75	4,7	2,3	11,0	2,0	19,5	2,1	32,0	2,4	45,8	2,6	61	2,4	82	2,4	111	2,4
2	4,9	2,7	11,6	2,4	20,4	2,4	32,4	2,7	46,6	2,7	65	2,7	88	2,6	119	2,7
2,5	5,4	3,1	13,2	3,0	23,2	3,1	36,6	3,4	51,9	3,2	72	3,3	99	3,2	135	3,3
3	6,1	3,6	14,7	3,7	25,8	3,7	40,3	4,1	57,2	3,8	81	4,0	108	3,7	148	4,0
3,5	6,6	4,2	15,6	4,3	28,1	4,4	44,3	4,8	62,9	4,5	88	4,7	117	4,5	160	4,6
4	7,2	4,9	16,5	5,0	30,3	5,0	48,6	5,6	66,4	5,0	94	5,3	125	5,1	171	5,2
5					35,0	6,1	54,8	7,1	75,1	6,2	107	6,6	138	6,0	197	6,4
6							60,4	8,6	83,9	7,5	118	7,9	150	7,5	217	7,6
7									91,7	8,6	129	9,3	164	8,5	238	8,9
8									98,2	9,8	139	10,5	176	9,6	257	10,2
9											149	11,8	187	11,2	274	11,3
10											156	13,1	198	12,5	290	12,6
11													208	13,8	306	13,9
12													216	14,6	322	15,1
14															348	17,6

SPEAR NOZZLE

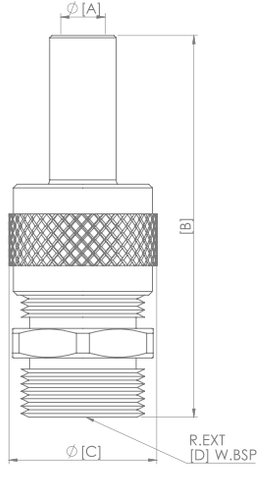



Spear Nozzle

Jets

PROJECT VIEW

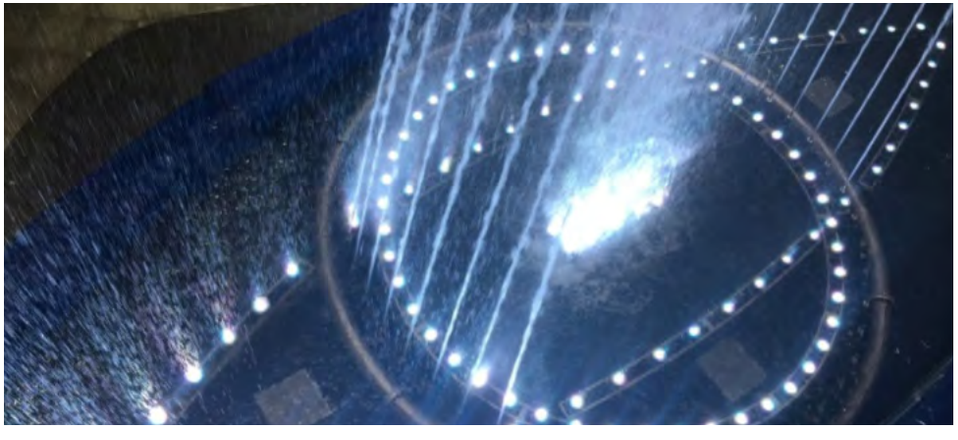



JETS

BIG SPEAR NOZZLE

NEW DESIGN



Big Spear Nozzle is a nozzle designed for ornamental fountains with great height jets.

Those are entirely made of AISI 316 stainless steel, which provides high sturdiness and oxidation resistance, and provides a stylish finish to the fountain. They can be made of brass material on request.

It has a 10⁰ adjustable joint to correct the jet outlet in case of misalignment of manifolds or pipes.

NOZZLE	BIG SPEAR NOZZLE 25		BIG SPEAR NOZZLE 38	
Code	66646		66647	
Inlet	G 2-1/2" F		G 4" F	
Jet diameter A	Ø 25 mm		Ø 38 mm	
Dimensions BxC	317×145 mm		463×205 mm	
Jet height [m]	l/min	m	l/min	m
10	440	13,5	895	13,0
12,5	485	17,0	990	16,5
15	550	20,0	1110	19,5
20	615	27,5	1300	26,0
25	680	34,0	1440	32,0
30	760	42,0	1625	39,0
35	810	48,0	1760	46,0
40	865	55,0	1850	52,0
50	970	65,0	2080	65,0

PROJECT VIEW





BIG SPEAR NOZZLE

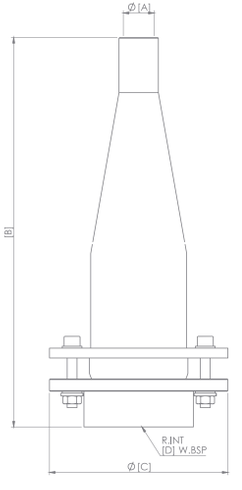

Fan Jet Nozzle produces a wide range of water that simulates a waterfall.

It can be installed in vertical or inclined position, generating two different ornamental effects.

The ornamental effect doesn't depend on the level of water.

They are entirely made of AISI 316 stainless steel, which provides high sturdiness and oxidation resistance, and provides a stylish finish at the fountain.

NOZZLE	FAN JET NOZZLE 4		FAN JET NOZZLE 6	
Code	66695		66696	
Inlet c	G 1" M		G 1-1/2" M	
Nozzle orifice	4×85 mm		G 1-1/2" M	
Dimensions AxB	165×88 mm		5×100 mm	
JET HEIGHT [m]	l/min	m	210×103mm	m
0,25	59	0,4	87	0,4
0,5	78	0,6	120	0,8
0,75	90	1	145	1,2
1	107	1,2	165	1,6
1,5	131	1,8	208	2,4
2	160	2,5	241	3,2
Jet LxH 45º [m]				
0,5 × 0,1	65	0,4	74	0,4
0,75 × 0,15	89	0,8	92	0,6
1 × 0,2	103	1	115	0,8
1,5 × 0,3	130	1,2	142	1,2
2 × 0,4	156	2,3	174	1,5
2,5 × 0,6	190	3,5	200	1,8

FAN JET NOZZLE

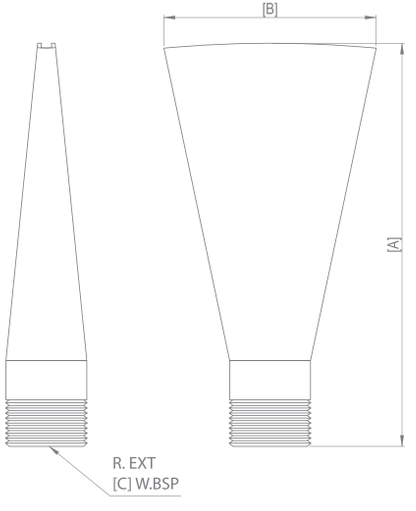

JETS

FAN JET NOZZLE



PROJECT VIEW



JETS

NEW DESIGN

CASCADE NOZZLE

Cascade Nozzle is a classical jet that mixes water and air creating a solid and conic column of water visible from any direction. Furthermore contributes to an oxygen enrichment of the water.

Those nozzles are water level depending, so must be installed on a determinate height. Strong waves can cause abrupt changes in the height of the jet.

They are entirely made of AISI 316 stainless steel, which provides high sturdiness and oxidation resistance, and provides a stylish finish at the fountain.

NOZZLE	CASCADE NOZZLE 35		CASCADE NOZZLE 50		CASCADE NOZZLE 80		CASCADE NOZZLE 100		CASCADE NOZZLE 125	
Code	66691		66692		66693		66694		66698	
Inlet D	G 1/2" H		G 1" H		G 1-1/2" H		G 2" H		G 2-1/2" H	
Jet diameter A	Ø 35 mm		Ø 50 mm		Ø 80 mm		Ø 100 mm		Ø 125 mm	
Dimensions BxC	110×48 mm		140×66 mm		185×104 mm		261×125 mm		298×145 mm	
Water level E	20 mm		25 mm		30 mm		35 mm		40 mm	
Jet height [m]	l/min	m	l/min	m	l/min	m	l/min	m	l/min	m
0,5	16	7,4	36	2,6	64	2,1	130	2,3		
0,75	19	9,8	43	3,5	78	2,9	144	2,9		
1	22	12,8	48	4,4	89	3,7	155	3,6	241	3,7
1,5	28	18,6	58	6,1	109	5,4	186	5,3	291	5,0
2	32	24,0	66	7,8	124	7,2	210	6,8	332	6,3
2,5			75	11,1	136	8,7	231	8,1	368	7,7
3			81	14,6	148	10,5	250	9,5	400	8,9
4			87	17,5	168	13,6	276	12,3	458	11,4
5			96	20,4	182	16,0	321	15,1	509	14,2
6					195	19,1	348	17,9	555	16,5
7					207	22,9	378	21,1	600	19,0
8					220	26,4	402	24,2	646	21,7
10					238	31,1	446	29,2	722	27,0
12							465	33,5	783	32,2
14							474	37,0	847	38,1
16									901	42,6
18									969	47,7

CASCADE NOZZLE

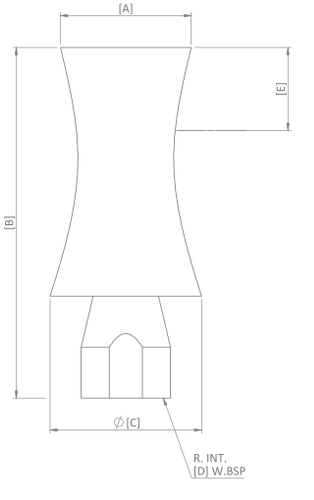



Cascade Nozzle

Jets

PROJECT VIEW





JETS

NEW DESIGN

FOAMY NOZZLE

Foamy Nozzle produces a very sparkling and consistent jet. The ornamental effect doesn't depend on the water level and it's very wind resistant, generating a great uniformity on the fountain.

Furthermore, it contributes to an oxygen enrichment of the water.

They are made entirely of AISI 316 stainless steel, which provides high sturdiness and oxidation resistance, and provides a stylish finish at the fountain.

NOZZLE	FOAMY NOZZLE 35		FOAMY NOZZLE 50		FOAMY NOZZLE 35 PL/SS	
Code	66689		66690		71335	
Inlet C	G 1" M		G 1" M		G 1" M	
Jet diameter	Ø 35 mm		Ø 50 mm		Ø 32 mm	
Dimensions AxB	53×155 mm		90×156 mm		60×158 mm	
Jet height [m]	l/min	m	l/min	m	l/min	m
0,25	45	1,7	96	2,2	44	0,9
0,5	56	2,1	119	2,9	59	1,3
0,75	71	2,9	140	3,6	68	1,9
1	80	3,4	158	4,5	76	2,5
1,5	96	4,6	193	6,3	93	3,9
2	108	5,4	226	8,2	107	5
2,5	118	6,6	249	10	121	6,4
3			270	11,7	132	7,8
3,5			287	13,4	142	8,7
4			302	15,1		
4,5			314	16,9		
5			338	18,7		

FOAMY NOZZLE 35 Code: 66689

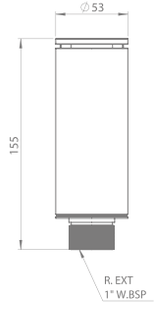

FOAMY NOZZLE 50 Code: 66690

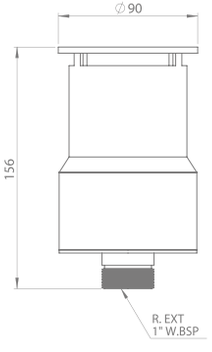

FOAMY NOZZLE 35 PL/SS Code: 71335

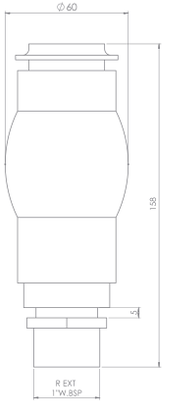



Foamy Nozzle

Jets

PROJECT VIEW





JETS

TFE NOZZLE

NEW PRODUCT

TFE Nozzle produces a sparkling and consistent jet with less flow requirements to similar nozzles with the same diameter. The ornamental effect doesn't depend on the water level and It Is very wind resistant, generating a great uniformity on the fountain.

It is made entirely of AISI 316 stainless steel, which provides high sturdiness and rusting resistance, and provides a stylish finish at the fountain.

TFE NOZZLE	TFE25 NOZZLE		TFE32 NOZZLE		TFE40 NOZZLE	
Code	72475		72476		72477	
Inlet C	G 1" M		G 1 1/4" H		G 1 1/2" H	
Jet diameter	Ø 25 mm		Ø 32 mm		Ø 40 mm	
Dimensions AxB	155×38 mm		173×43 mm		210×53 mm	
Jet height [m]	l/min	m	l/min	m	l/min	m
0,5	30	1,1	45	1,4	61	1,8
1	38	1,8	56	2,3	74	2,8
1,5	47	2,6	69	3,3	90	4,0
2	52	3,5	79	4,3	105	5,4
2,5	57	4,3	86	5,2	114	6,2
3	63	5	94	6,1	125	7,2
3,5	68	6	102	7,3	135	8,5
4	75	6,8	112	8,1	147	9,6
4,5			119	9,1	159	10,9
5					167	12,5
6					183	15,2

TFE NOZZLE

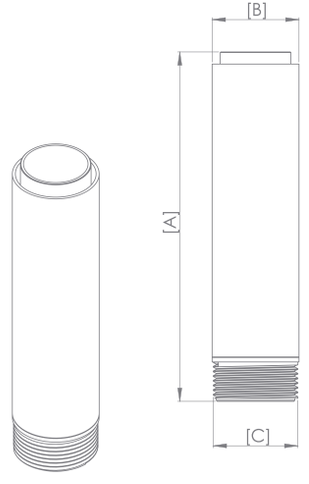



TFE Nozzle

Jets

PROJECT VIEW





JETS

NEW DESIGN

FOG NOZZLE

Fog Nozzle is a nozzle that generates a total dispersion of water producing fog in seconds.

This revolutionary nozzle provides a pleasant feeling of freshness and humidification in the atmosphere.

They are entirely made of AISI 316 stainless steel, which provides high sturdiness and oxidation resistance, and provides a stylish finish to the fountain.

NOZZLE	FOG WIDE NOZZLE	
Code	66697	
Inlet	G 1/4" M	
Jet diameter	Ø 1,4 mm	
Dimensions	38×14 mm	
Jet angle α [°]	l/min	m
68	0,72	4
76	0,95	7
84	1,4	15
90	1,6	20
95	2	30
98	2,3	40
102	2,8	60

NOZZLE	FOG NARROW NOZZLE	
Code	70668	
Inlet	G 1/4" M	
Jet diameter	Ø 1,4 mm	
Dimensions	26×14 mm	
Jet angle α [°]	l/min	m
10	5,3	14
15	7,6	28
19	10,6	55
23	17	138

NICHE	FOG NICHE
Code	70669
Inlet	G 1/4“ / 1”
Drain	G 2"
Dimensions	253×220×220 mm
Material	Stainless steel AISI316

FOG WIDE NOZZLE Code: 66697

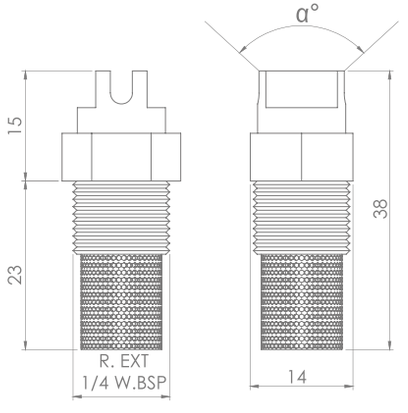

FOG NARROW NOZZLE Code: 70668

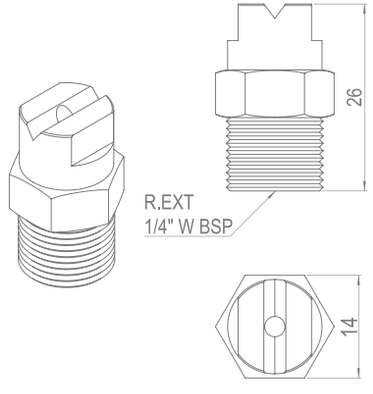

NICHE FOG Code: 70669

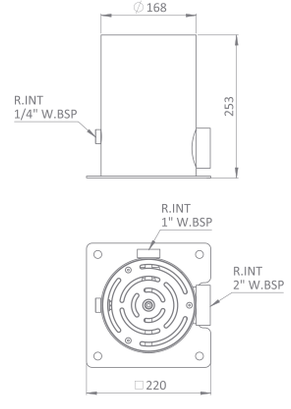



Fog Wide Nozzle

Jets



Fog Narrow Nozzle

Jets



Niche Fog

Jets

PROJECT VIEW





JETS

VULCANO S NOZZLE



* Product Upon Request

Volcano nozzle produces a set of parabolic jets reaching different heights and leghts, achieveing a nice and visible water effect.

They are entirely made of AISI 316 stainless steel, which provides high sturdiness and oxidation resistance, and provides a stylish finish at the fountain.

VULCANO S NOZZLE Code: 67204		
Inlet	G 1" M	
Jet diameter	Ø 1×6 mm + 20×3 mm	
Dimensions	80 × 70 mm	
Jet height [m]	l/min	m
0.5 m	27	1,3
1.0 m	35	2,3
1.5 m	43	3,1
2.0 m	49	3,7
2.5 m	55	4,4
3.0 m	60	5,2
4.0 m	72	6,6

PROJECT VIEW





VULCANO S NOZZLE

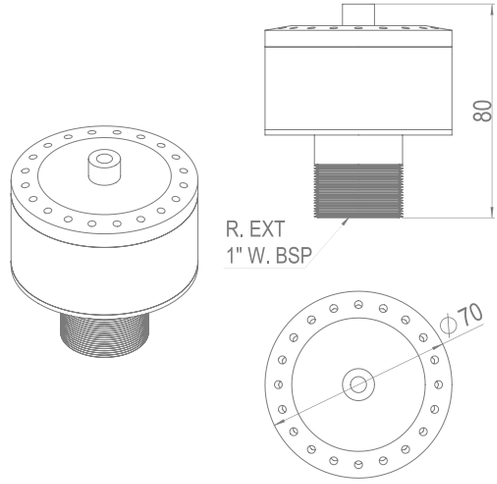

Mushroom nozzle produces a perfectly laminar and semi-spherical transparent lamina. When falling it creates a completely continuous bell-shaped effect.

They are entirely made of AISI 316 stainless steel, which provides high sturdiness and oxidation resistance, and provides a stylish finish at the fountain.

MUSHROOM NOZZLE Code: 67206		
Inlet	G 1" F	
Dimensions AxB	300×80 mm	
Diameter [mm]	l/min	m
250	29	1,2
500	32	1,3
750	40	1,4
1000	50	1,5

JETS
MUSHROOM NOZZLE



* Product Upon Request

MUSHROOM NOZZLE

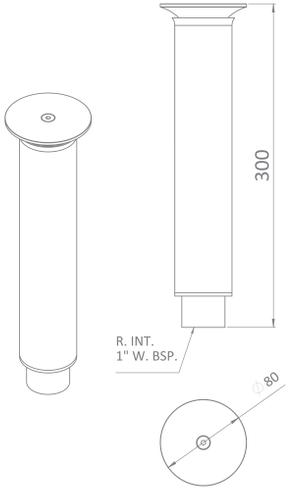

PROJECT VIEW





JETS

DANCER JET





Rhythmic and elegant movements combined with the swing of the water provided by the Dancer jet contribute to create new sensations and dynamism just by the movement of the water.

The combination of light and water effects makes it innovative and spectacular, and without a doubt, it delivers the effects intended for the enjoyment of spectators.

The Dancer jet follows any kind of rhythm thanks to its axial movement.

The infinite number of sequences of this jet means that extremely spectacular shows can be put on.

DANCER JET Code: 67652	
Dimensions (L x W x H) [mm]	580 × 300 × 470
Light type (optional)	RGB - DMX
Dancer Jet nominal voltage [V]	230 VAC
Power (Dancer) [W]	200
Power rating [A]	1,1
Water Inlet connection	1-1/2" G
Jet diameter [mm]	16 / 20 (optional)
Maximum water depth [mm]	500
Jet movement range [°]	-60 / 60
Jet movement velocity [°/s]	0 - 240
Material	Stainless steel 316
Weight [kg]	24
Dynamic jet height	With individually pump and frequency inverter
Protection class	IP 68

PROJECT VIEW



ACCESSORIES

NOZZLES	CODE
Jet Dancer Nozzle Short 16	67646
Jet Dancer Nozzle Long 16	67647
Jet Dancer Nozzle Short 20	67648
Jet Dancer Nozzle Long 20	67649

LIGHTING FIXATION	CODE
Fixation for Halospot light	67650

DANCER JET

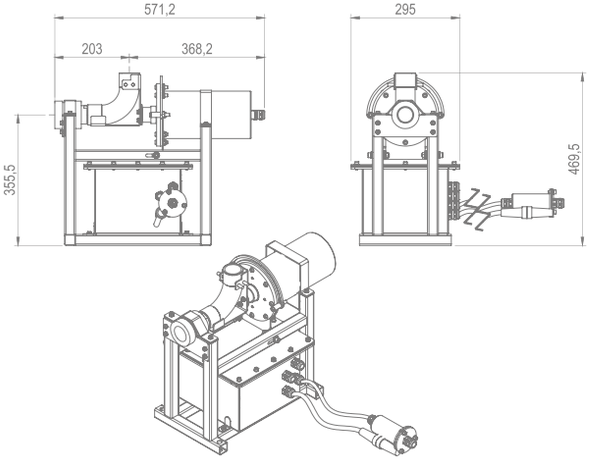

The Swing Dancer jet effect provides a show of light, color and graceful movements that express feelings and emotions transmitted through the magical combination of water and light, all of which creates the impression of a ballet staged on the water.

The multidirectional spout generates unique movements that create numerous shapes and figures. The jet can be programmed to go faster or slower so that it appears to dance on the water in dynamic, elegant movements.

SWING DANCER JET Code: 67645	
Dimensions (L x W x H) [mm]	1030 × 620 × 450
Light type (optional)	RGB - DMX
Dancer Jet nominal voltage [V]	230 VAC
Power (Dancer) [W]	350
Power rating[A]	1,9
Water Inlet connection	2" G
Jet diameter [mm]	16 / 20 (optional)
Maximum water depth [mm]	500
Jet movement range X axis [°]	-60 / 60
Jet movement range Y axis [°]	-60 / 60
Jet movement velocity in axis X[°/s]	0 – 120
Jet movement velocity in axis Y[°/s]	0 – 240
Material	AISI 316 stainlees steel
Weight [kg]	55
Dynamic jet height	With standal pump and frequency inverter
Protecction level	IP 68

SWING DANCER JET

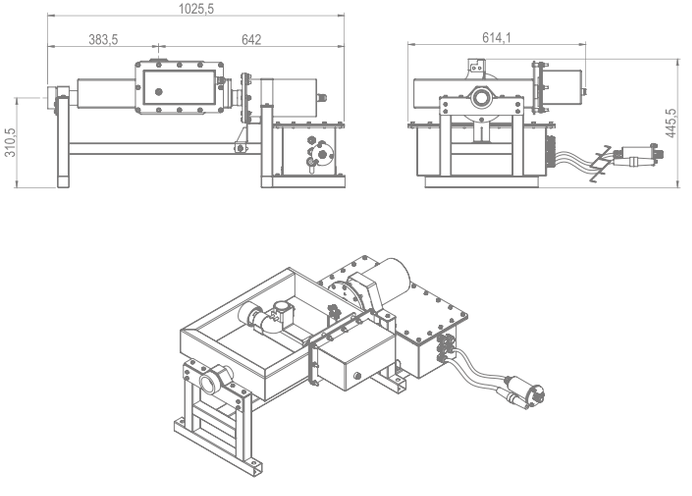

JETS
SWING DANCER JET



PROJECT VIEW

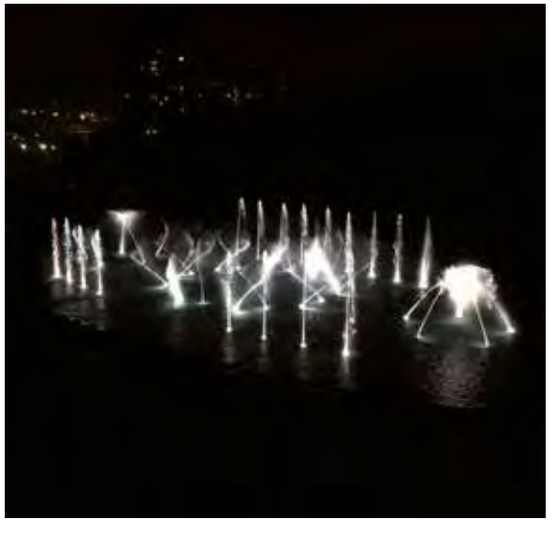

ACCESSORIES

NOZZLES	CODE
Jet Dancer Nozzle Short 16	67646
Jet Dancer Nozzle Long 16	67647
Jet Dancer Nozzle Short 20	67648
Jet Dancer Nozzle Long 20	67649

LIGHTING FIXATION	CODE
Fixation for Halospot light	67650

DANCER NOZZLE

Dancer Nozzle is an ideal nozzle to combine with Dancer Jet and Swing Dancer Jet equipment. Its versatility in the lengths of thread allows to adapt to different types of lighting.

They are entirely made of nickeled brass and AISI 316 stainless steel, which provides high sturdiness and oxidation resistance, and provides a stylish finish to the fountain.

NOZZLE	DANCER NOZZLE SHORT 16		DANCER NOZZLE LONG 16		DANCER NOZZLE SHORT 20		DANCER NOZZLE LONG 20	
Code	67646		67647		67648		67649	
Inlet	G 1-1/2" M		G 1-1/2" M		G 1-1/2" M		G 1-1/2" M	
Jet diameter A	Ø 16 mm		Ø 16 mm		Ø 20 mm		Ø 20 mm	
Recommend light	Halospot (I0403MIRNDMXI52/ I0403WIRNI52)		Circular led (I1261MWNDMXI52/ I1255MWNDMXI52)		Halospot (I0403MIRNDMXI52/ I0403WIRNI52)		Circular led (I1261MWNDMXI52/ I1255MWNDMXI52)	
JET HEIGHT [m]	l/min	m	l/min	m	l/min	m	l/min	m
0,5	46	1	46	1	70	1,2	70	1,2
0,75	55	1,3	55	1,3	80	1,3	80	1,3
1	62	1,5	62	1,5	87	1,5	87	1,5
1,25	70	1,9	70	1,9	95	1,8	95	1,8
1,5	76	2,1	76	2,1	104	2,1	104	2,1
1,75	82	2,4	82	2,4	111	2,4	111	2,4
2	88	2,6	88	2,6	119	2,7	119	2,7
2,5	99	3,2	99	3,2	135	3,3	135	3,3
3	108	3,7	108	3,7	148	4	148	4
3,5	117	4,5	117	4,5	160	4,6	160	4,6
4	125	5,1	125	5,1	171	5,2	171	5,2
5	138	6	138	6	197	6,4	197	6,4
6	150	7,5	150	7,5	217	7,6	217	7,6
7	164	8,5	164	8,5	238	8,9	238	8,9
8	176	9,6	176	9,6	257	10,2	257	10,2
9	187	11,2	187	11,2	274	11,3	274	11,3
10	198	12,5	198	12,5	290	12,6	290	12,6
11	208	13,8	208	13,8	306	13,9	306	13,9
12	216	14,6	216	14,6	322	15,1	322	15,1
14					348	17,6	348	17,6

DANCER NOZZLE SHORT Code: 67646 - 67648

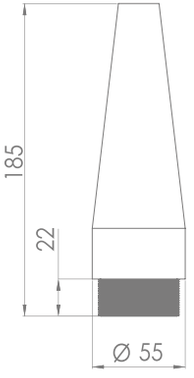

DANCER NOZZLE LONG Code: 67647 - 67649

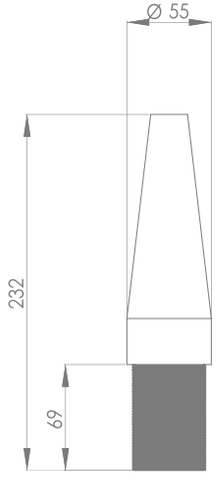



Dancer Nozzle

Jets

* Product Upon Request

PROJECT VIEW





GLASSY JET WITH JUMPING EFFECT

Crystalline laminar nozzle that does not spill a single drop of water. From start to finish, a perfect parabolic path is followed that is created on the basis of the laws of fluid dynamics.

The Glassy jet shines light in the water as it follows its path. It only illuminates the water and does not cause any light pollution.

There is also the Jumping effect option, which throws small streams of water across the parabolic path.

GLASSY JET WITH JUMPING JET	JET S WITH JUMPING EFFECT	GLASSY JET L WITH JUMPING EFFECT
Code	66560	66562
Dimensions (L x W x H) [mm]	300 × 220 × 450	440 × 320 × 710
Light type	RGB - DMX	RGB - DMX
Light nominal voltage [V]	24 VDC	24 VDC
Jumping nominal voltage [V]	24 VDC	24 VDC
Power (Jumping) [W]	24	24
Power (Light) [W]	4	4
Power (Total) [W]	28	28
Water inlet connection	1" G	1" G
Jet diameter [mm]	12 standard	16 standard
Maximum water depth [mm]	315	480
Jet rake range [°]	30-90	30-90
Light control	DMX (3 channel)	DMX (3 channel)
Jumping system control	Relay	Relay
Material	Stainless steel 316	Stainless steel 316
Weight [kg]	12	26
Dynamic parabola	With individually pump and frequency inverter	With individually pump and frequency inverter
Maximum parabola of water	4	6
Flow (max. parabola) [m3/h]	2	4,2
Pressure (max. parabola) [bar]	0,4	0,6
Hydrualic operation	130 microns filtered water	130 microns filtered water

GLASSY JET S WITH JUMPING EFFECT Code: 66560

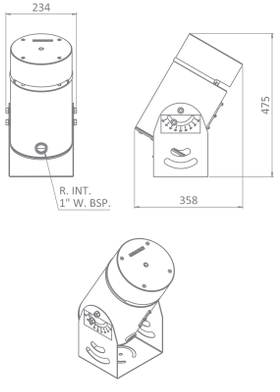

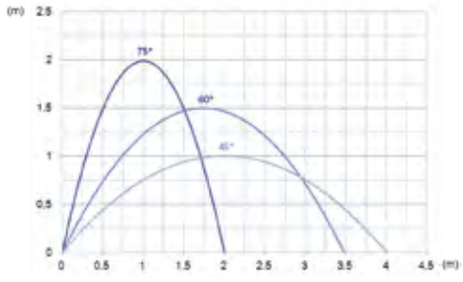

GLASSY JET L WITH JUMPING EFFECT Code: 66562

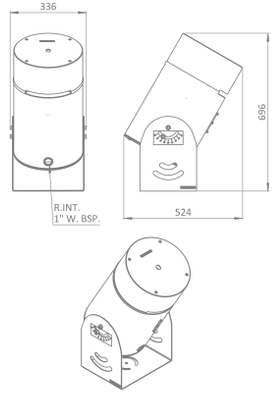





Glassy Jet with Jumping Effect

Jets

PROJECT VIEW





GLASSY JET

Crystalline laminar nozzle that does not spill a single drop of water. From start to finish, a perfect parabolic path is followed that is created on the basis of the laws of fluid dynamics.

The Glassy jet shines light in the water as it follows its path. It only illuminates the water and does not cause any light pollution.

There is also the Jumping effect option, which throws small streams of water across the parabolic path.

GLASSY JET	GLASSY JET S	GLASSY JET L
Code	66559	66561
Dimensions (L x W x H) [mm]	270 × 220 × 380	390 × 320 × 560
Light type	RGB - DMX	RGB - DMX
Light nominal voltage [V]	24 VDC	24 VDC
Jumping nominal voltage [V]	-	-
Power (Jumping) [W]	-	-
Power (Light) [W]	4	4
Power (Total) [W]	4,5	4,5
Water inlet connection	1" G	1" G
Jet diameter [mm]	12 standard	16 standard
Maximum water depth [mm]	320	480
Jet rake range [°]	30-90	30-90
Light control	DMX (3 channel)	DMX (3 channel)
Jumping control system	Relay	Relay
Material	ASIS 316 stainless steel	ASIS 316 stainless steel
Weight [kg]	7	20,5
Dynamic parabola	With individually pump and frequency inverter	With individually pump and frequency inverter
Maximum parabola of water	4	6
Flow (max. parabola) [m3/h]	2	4,2
Pressure (max. parabola) [bar]	0,4	0,6
Hydraulic operation	130 microns filtered water	130 microns filtered water

GLASSY JET S Code: 66559

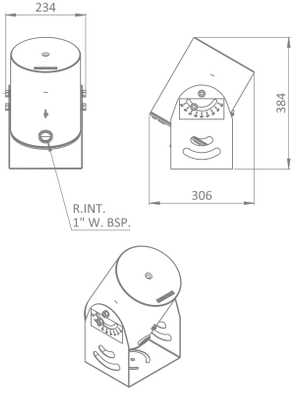

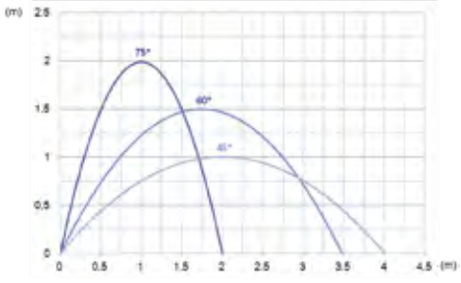

GLASSY JET L Code: 66561

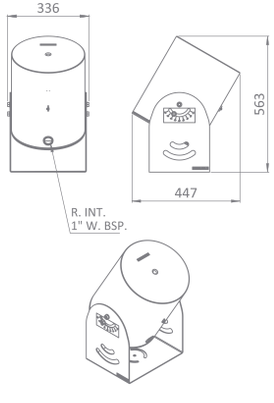





Glassy Jet

Jets

PROJECT VIEW





GLASSY JET WITHOUT LIGHT

Crystalline laminar nozzle that does not spill a single drop of water. From start to finish, a perfect parabolic path is followed that is created on the basis of the laws of fluid dynamics.

There is also the Jumping effect option, which throws small streams of water across the parabolic path.

GLASSY JET WITHOUT LIGHT	GLASSY JET S WITHOUT LIGHT	GLASSY JET L WITHOUT LIGHT
Code	67306	67307
Dimensions (L x W x H) [mm]	270 × 220 × 380	390 × 320 × 560
Light type	-	-
Light nominal voltage [V]	-	-
Jumping nominal voltage [V]	-	-
Power (Jumping) [W]	-	-
Power (Light) [W]	-	-
Power (Total) [W]	-	-
Water inlet connection	1" G	1" G
Jet diameter [mm]	12 standard	16 standard
Maximum water depth [mm]	320	480
Jet rake range [°]	30-90	30-90
Light control	-	-
Jumping control system	-	-
Material	ASIS 316 stainless steel	ASIS 316 stainless steel
Weight [kg]	6,5	20
Dynamic parabola	With individually pump and frequency inverter	With individually pump and frequency inverter
Maximum parabola of water	4	6
Flow (max. parabola) [m3/h]	2	4,2
Pressure (max. parabola) [bar]	0,4	0,6
Hydrualic operation	130 microns filtered water	130 microns filtered water

GLASSY JET S WITHOUT LIGHT Code: 67306

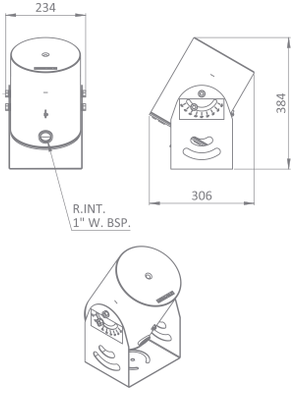

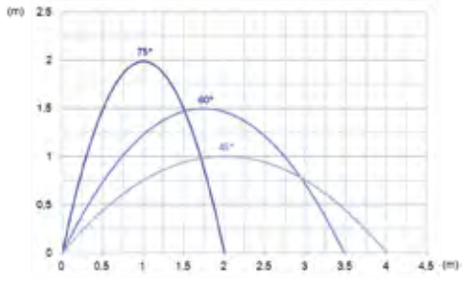

GLASSY JET L WITHOUT LIGHT Code: 67307

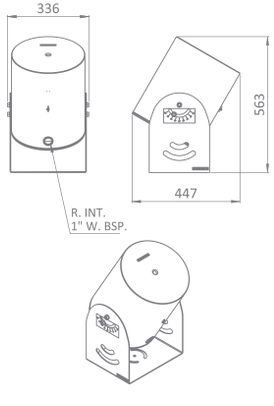





Glassy Jet Without Light

Jets

* Product Upon Request

PROJECT VIEW





JETS

NEW DESIGN

ROCKET JET

The Rocket jet gives the effect of an explosion of water from the ground that rises up in a split second to above the height of really tall buildings as it can reach heights of up to 50 meters.

The explosion of water creates a perfect vertical line that will be the centre of attention anywhere.

The lighting highlights the height of the water to turn it into a powerful beam of light, which rises at high speeds and draws coloured lines on the water.

The combination of several units of this effect will create spectacular high speed sequences.

ROCKET JET	ROCKET JET S	ROCKET JET M	ROCKET JET L
Code	66564	66565	66566
Dimensions (L x W x H) [mm]	3 × 248 × 727	530 × 515 × 887	642 × 514 × 1558
Nominal voltage [V]	24 VDC	24 VDC	24 VDC
Power [W]	25	2 × 25	2 × 25
Power rating [A]	1,1	2 × 1,1	2 × 1,1
Air Inlet connection	1" G	2 × 1" G	2 × 1" G
Air pressure [bar]	2,5	5	10
Water level [mm]	620	720	1320
Jet diameter [mm]	19	19	19
Jet height [m]	15	30	50
Material	Stainless steel 316	Stainless steel 316	Stainless steel 316
Weight [kg]	18	58	75
Refill time (s)	5	15	30
Air consumption (L)	15	120	225

ROCKET JET S Code: 66564

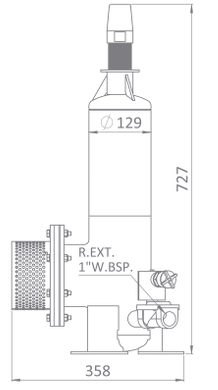

ROCKET JET M Code: 66565

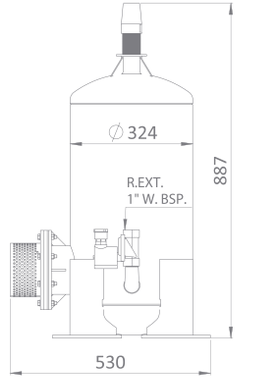

ROCKET JET L Code: 66566

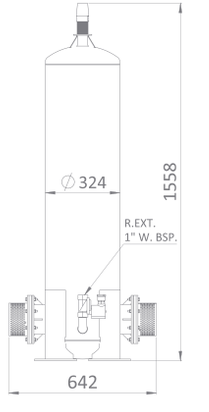

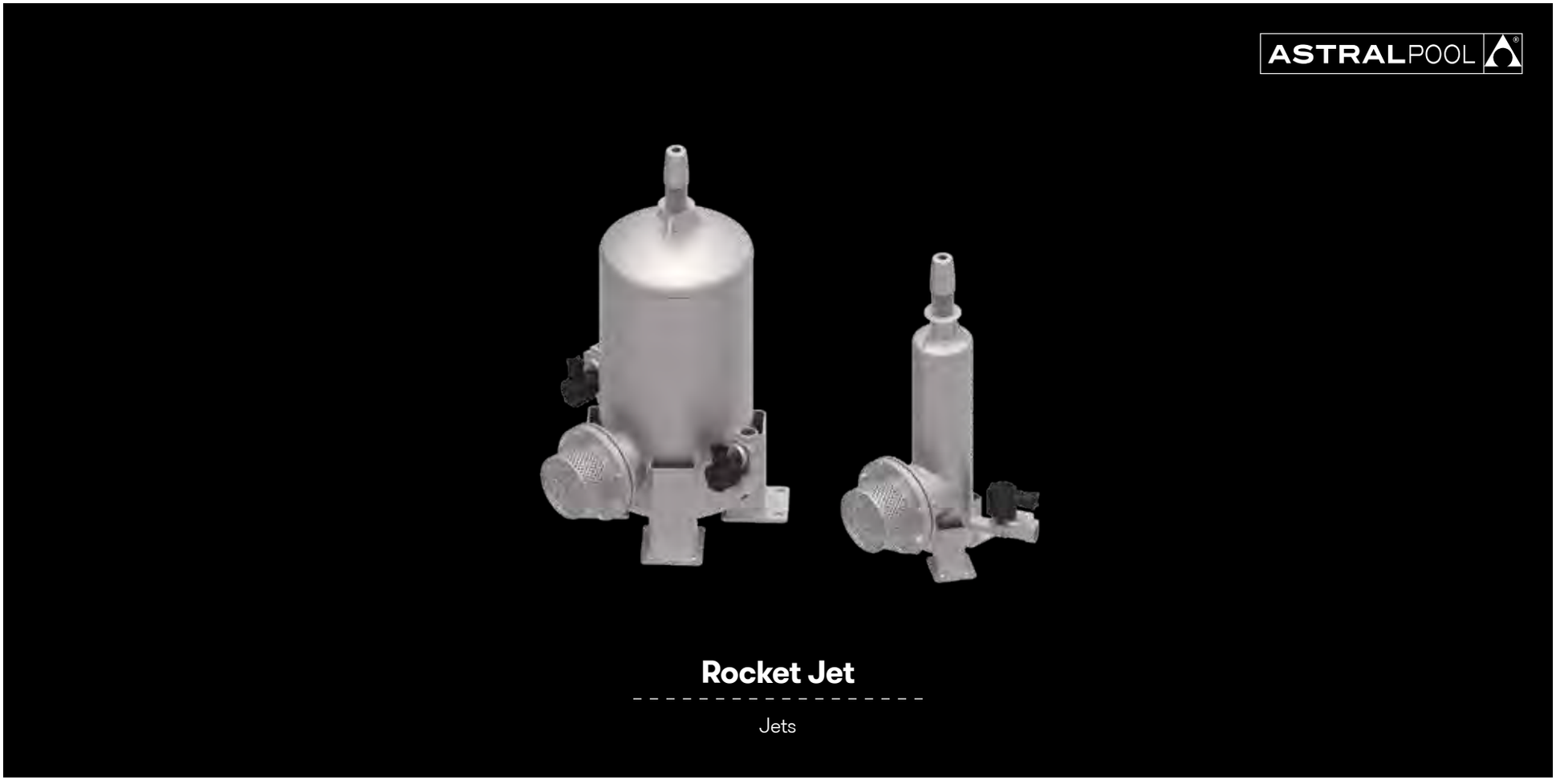

PROJECT VIEW

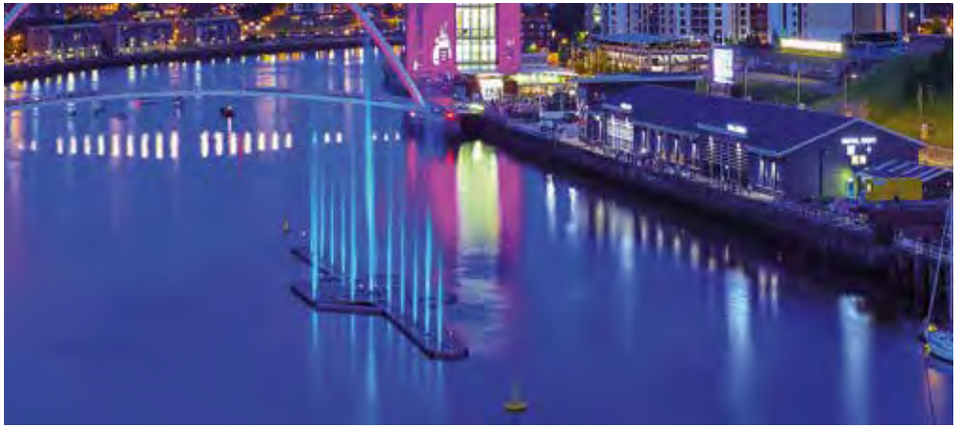



JETS

ROCKET HORIZONTAL JET



The Rocket jet gives the effect of an explosion of water from the ground that rises up in a split second to above the height of really tall buildings as it can reach heights of up to 50 meters.

The explosion of water creates a perfect vertical line that will be the centre of attention anywhere.

The lighting highlights the height of the water to turn it into a powerful beam of light, which rises at high speeds and draws coloured lines on the water.

The combination of several units of this effect will create spectacular high speed sequences.

ROCKET HORIZONTAL JET Code: 66563	
Dimensions (L x W x H) [mm]	1350 × 305 × 630
Nominal voltage [V]	24 VDC
Power [W]	25
Power raring [A]	1,1
Air Inlet connection	1" G
Air pressure (max.) [bar]	4,5
Maximum water depth [mm]	570
Minimum water depth [mm]	470
Jet diameter [mm]	19
Jet height [m]	20
Material	AISI 316 stainless steel
Weight [kg]	31
Refill time (s)	10
Air consumption (L)	38

PROJECT VIEW





ROCKET HORIZONTAL JET

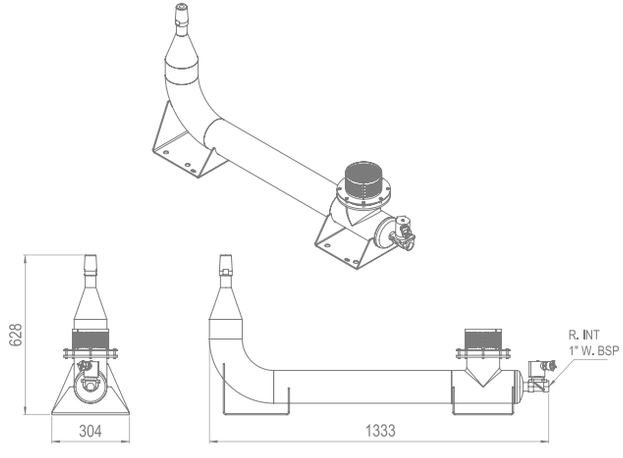

The stylised, tall and controlled Fire jet produces an eye-catching effect, not commonly seen, let alone in a fountain! Fire has always been an larger-than-life feature that emanates power and strength, and in a fountain display, it adds the cherry on the cake.

Water and fire, two opposite elements that marry perfectly when a magic show is put on; an explosive combination and the most impressive you could ever imagine.

The hard work done has led to a new concept: a variety of colours for the fire jets: blue, yellow, green, ...

The flames do not smell or produce smoke because the system does not run on gas or fuel oil. The fluid that creates smokeless flames is readily available everywhere.

FIRE JET Code: 66567	
Dimensions (L x W x H) [mm]	250 × 250 × 553
Nominal voltage [V]	230 VAC
Power [W]	500
Power rating [A]	2,7
Inlet connection	1/4" G
Pressure (max.) [bar]	16
Maximum water depth [mm]	315
Jet height [m]	4 - 10
Material	Stainless steel 316
Weight [kg]	14,5
Protection rating	IP 68

FIRE JET

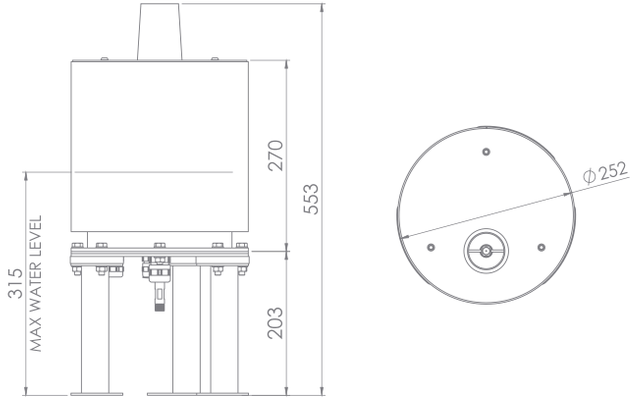

JETS

FIRE JET

NEW DESIGN

ASTRALPOOL



* Product Upon Request

PROJECT VIEW





JETS

NEW DESIGN

SWITCH S SYSTEM

Switch System is a dynamic jet ideal for interactive fountains such as Funsquare type, to produce fast water games with individual control for each installed jet.

The design of this jet allows state changes without water hammer in the installation.

It has many tile models being able to choose between different types of round and square designs.

SWITCH S SYSTEM		
Dimensions [mm] (see drawings)	300 × 300 × 371 / D.400 × 371	
Nominal Voltage [V]	24 VDC	
Power (without LED) [W]	25	
EV Nominal Current [A]	1,1	
Lighting Control	DMX	
Water connections	1" G	
Jet diameter [mm]	12	
Material	Stainless steel 316 / Brass	
Protection class	IP 68	
Hydraulic requirements	130 microns filtered water	
JET HEIGHT [m]	l/min	m
0,5	25,4	4,5
0,75	30,2	4,8
1	33,6	5,0
1,25	39,0	5,5
1,5	40,9	5,6
1,75	45,8	6,1
2	46,6	6,2
2,5	51,9	6,7
3	57,2	7,3
3,5	62,9	8,0
4	66,4	8,5

66569
Power (Light) [W]: 3W

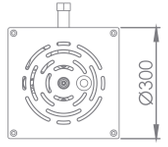

73358
Power (Light) [W]: 6W

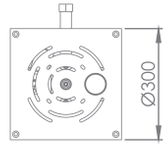

73360
Power (Light) [W]: 16W

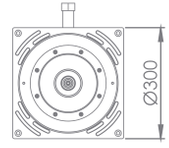

73357
Power (Light) [W]: 6W

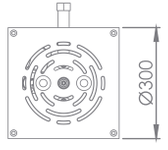

73359
Power (Light) [W]: 12W

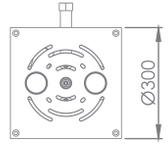

73361
Power (Light) [W]: 16W

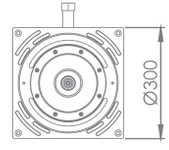

73351
Power (Light) [W]: 3W

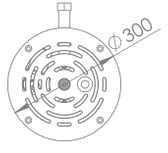

73353
Power (Light) [W]: 6W

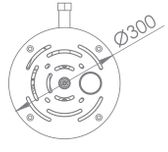

73355
Power (Light) [W]: 16W

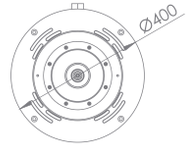

73352
Power (Light) [W]: 6W

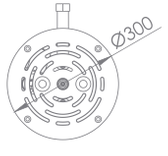

73354
Power (Light) [W]: 12W

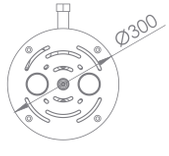

73356
Power (Light) [W]: 16W

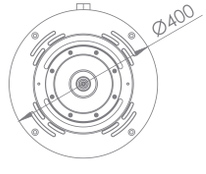

SWITCH S

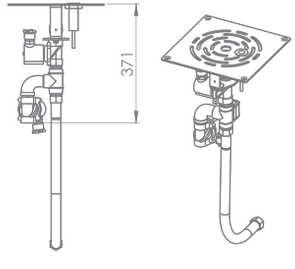

SWITCH S

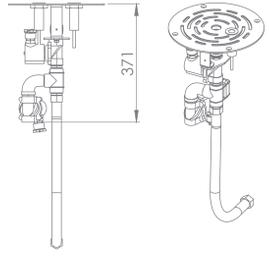



Switch S

Jets

PROJECT VIEW





JETS

NEW DESIGN

SWITCH L SYSTEM





* Product Upon Request

Switch System is a dynamic jet ideal for interactive fountains such as Funsquare type, to produce fast water games with individual control for each installed jet.The design of this jet allows state changes without water hammer in the installation.

For dry fountains there is the option of the Switch System with 316 stainless steel niche and integrated led RGB-DMX projectors.

SWITCH L SYSTEM Code: 66570 (Niche not included)	
Dimensions (LxWxH) [mm]	210 × 120 × 261
Nominal Voltage [V]	24 VDC
Power [W]	25
Nomial Current [A]	1,1
Water connections	1-1/2" G
Maximum flow [l/min]	290
Maximum pressure [bar]	4
Pressure drop Qn [bar]	0,4 – 1
Material	Stainless steel 316 / Brass
Weight [kg]	6,5
Protection class	IP 68
Hydraulic requirements	130 microns filtered water

SWITCH L NICHE Code: 66572	
Dimensions (L x W x H) [mm]	450 × 435 × 500
Material	Stainless steel 316
Weight [kg]	19
Water connections	1 × 1-1/2", 1 × 2"
Connections for wiring	2 × 1"

PROJECT VIEW





SWITCH L SYSTEM Code: 66570

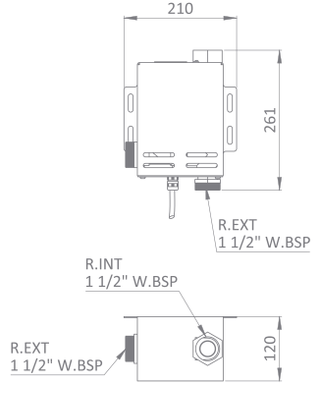

SWITCH L NICHE Code: 66572

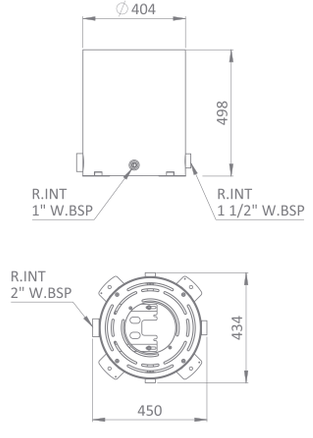

Cosmos produces a sequence of perfect spherical water droplets that float in the air and shoots the water up and down. These movements emulate cosmic water particles that act randomly.

The illumination emphasises the effect by producing a random display of different coloured particles.

Cosmos can alternate the droplets with another astonishing effect: small, extremely fast vertical jets able to create high-speed cascades, waves, etc.

COSMOS Code: 66553	
Dimensions (L x W x H) [mm]	144 × 80 × 259
Light type	RGB - DMX
Light nominal voltage [V]	24 VDC
Cosmos nominal voltage [V]	24 VDC
Power (Light) [W]	3
Power (Cosmos) [W]	14
Power (Total) [W]	17
Power rating[A]	0,6
Waterinlet connection	3/8" G
Jet diameter [mm]	4
Jet function flow h=1m [l/min]	3,4
Pressure (max.) [bar]	1,5
Light control	DMX (3 channels)
Material	AISI 316 stainless steel / Brass / Other
Weight [kg]	2
Protection rating	IP 68

COSMOS

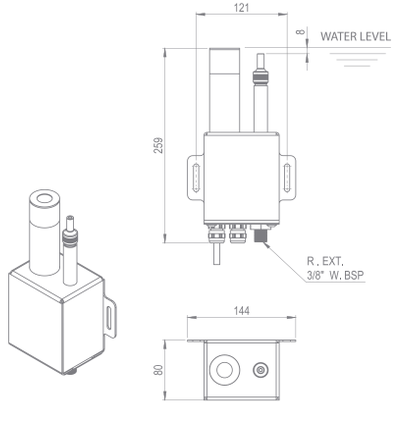

JETS

COSMOS

ASTRALPOOL



PROJECT VIEW





INTERACTION

INMOTION SYSTEM

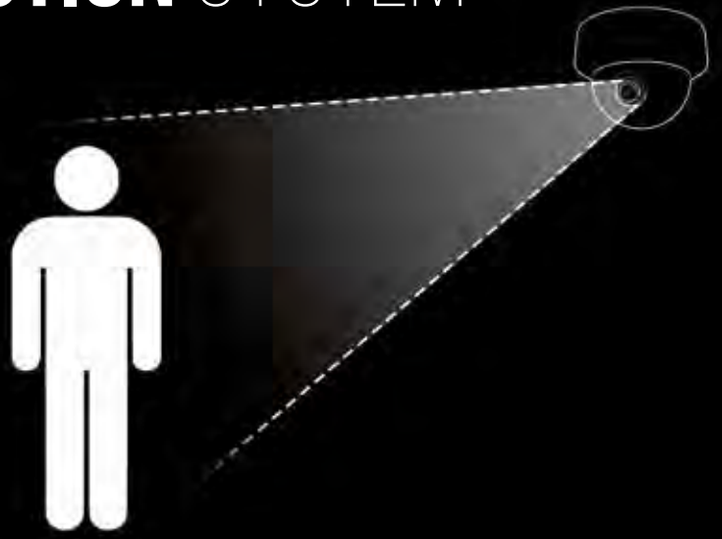

* Product Upon Request

The InMotion system draws on the very latest technology for controlling water features. Users will now be able to operate fountain displays by using their body signals and gestures. When users move their arms up or down, the jets go faster or slower.

This system works with the Funsquare fountains and any fountain with Swing Dancer or Dancer jets.

INMOTION SYSTEM Code: 66573	
Detection range [m]	5 – 10 m
Connection	Ethernet
Recognized gestures	Dynamic gestures Static gestures

PROJECT VIEW





The interactive sensors are the perfect complement to be placed in any ornamental fountain.

Each sensor can produce a different variability into the fountain actuation in real time, producing a guaranteed fun for the whole family.

INTERACTIVE SENSOR BUTTONS	
Code	66574 (black) / 66574CL02 (blue) / 66574CL03 (green) / 66574CL04 (red)
Dimensions (L x W x H) [mm]	250× 255 × 258
Nominal Voltage [V]	24 (VDC)
Output	Digital Output (24 VDC)
Inlet Connection	1”
Material	Stainless steel 316 - PE-HD -500
Weight [kg]	7,8

INTERACTION

INTERACTIVE SENSOR BUTTONS

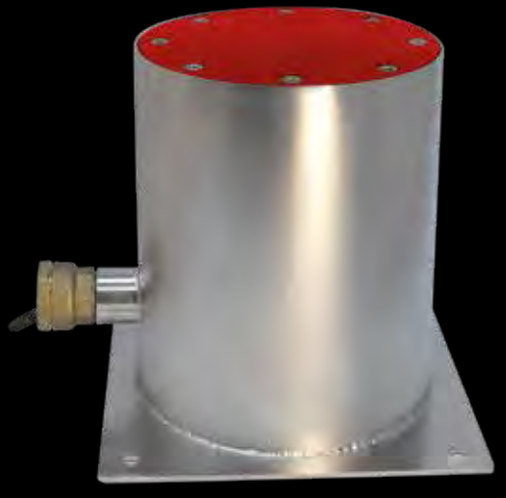

* Product Upon Request

INTERACTIVE SENSOR BUTTONS

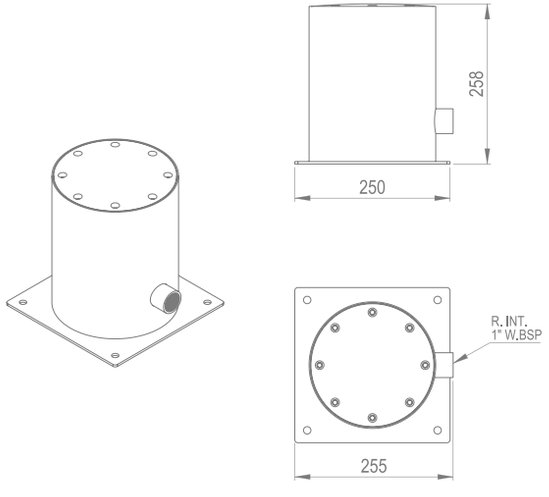

PROJECT VIEW



ONLED CODING

The coding which appears in more detail later refers to the lamps and projectors OnLED

A	Colour of LED emission	B	Material of the trim	DMX	Projectors for DMX system
C	Shape of face plate	D	Optic type		

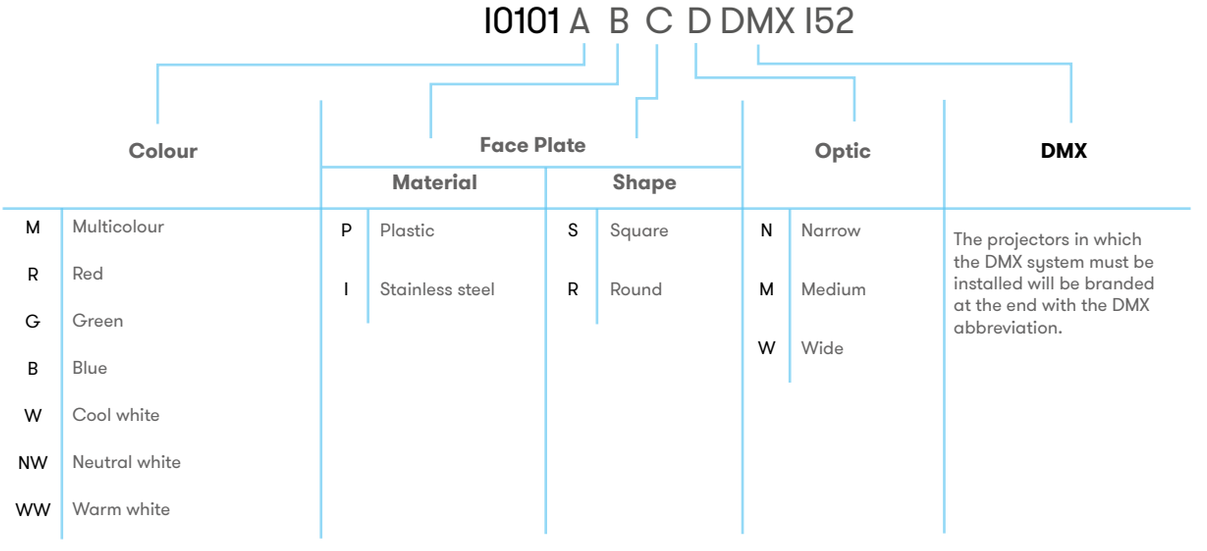

Example: **I0102MPRI52**
STD projector for a concrete pool, multicolour, round plastic face plate, without optic.

I0306WPRNI52
Mini projector with quick couplingi, white, round plastic face plate, narrow type optic.

Important: Always to include I52 at the end of the code

IDENTIFICATION

Product recommended for:

 Underwater installations

 Underwater and outdoor installations

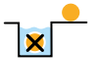 Outdoor installations

IP

First figure
Level of protection against the ingress of solid objects

0 - No protection
1 - Protection from solid objects with a diameter greater than 50mm
2 - Protection from solid objects with a diameter greater than 12.5 mm
3 - Protection from solid objects with a diameter greater than 2.5 mm
4 - Protection from solid objects with a diameter greater than 1 mm
5 - Protected from dust
6 - Hermetic to dust

Second figure
Level of protection against ingress of water

0 - No protection
1 - Dripping water
2 - Dripping water when tilted up to 15o
3 - Spraying water
4 - Splashing water
5 - Water jets
6 - Powerful water jets
7 - Protected from immersion effects
8 - Protection from prolonged immersion

Class

 **Class I** Luminaire in which the protection against electric shocks depends on the main insulation and an additional safety measure: earthing.

 **Class II** Luminaire in which the protection against electric shocks depends on the main insulation and an additional safety measure: double or reinforced insulation.

 **Class III** Luminaire in which the protection against electric shocks depends on feeding it with a low voltage power supply.

CE Marking

NIQ PROJECTOR

The NIQ is used for spas, wellness centres, stairs. It has the same function as the Mini projector but with smaller dimensions.

CODE	LIGHT	FACE PLATE	OPTIC	OPTION	ASTRALPOOL
I1245 I1246 I1287	**W** Cool white WW Warm white **M** Multicolour **MDMX** Multicolour DMX	Material **P** Plastic **I** Stainless Steel Shape **S** Square **R** Round	**N** Narrow **M** Medium **W** Wide	**DMX**	**I52**

CONTROL
Multicolour **I0826I52** Modulator **I0828I52** Remote control **I0831I52** Push-button DMX **I0832DMXI52** DMX power supply **I0832DMXFEI52** DMX external power supply

Consumption

Monocolour: 4W (6VA)
Multicolour: 4W (7VA)
MDMX: 4W (4VA)

Voltage

Monocolour: 12 Vac
Multicolour: 12 Vac
MDMX: 24 Vdc

Lumens

Monocolour: 315 lm
Multicolour: 186 lm
MDMX: 186 lm

Efficiency

Monocolour: 78,7 lm/W
Multicolour: 46,5 lm/W
MDMX: 46,5 lm/W

Life Span

L80 - 60.000h

Protection level

IP68

NIQ
Monocolour/ monocolor Optic W

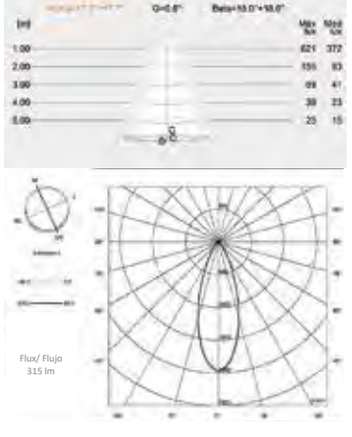

NIQ
Monocolour/ monocolor Optic N

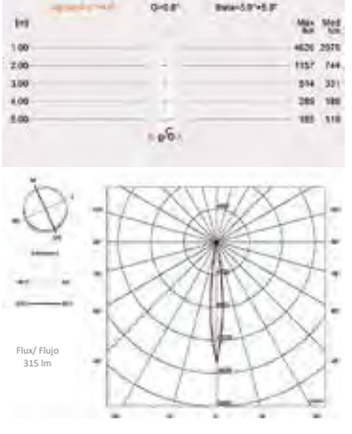

NIQ
Multicolour/ multicolor Optic W

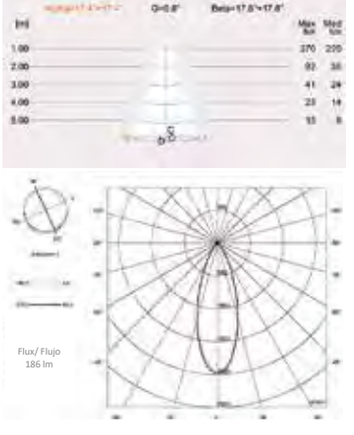

NIQ
Multicolour/ multicolor Optic N

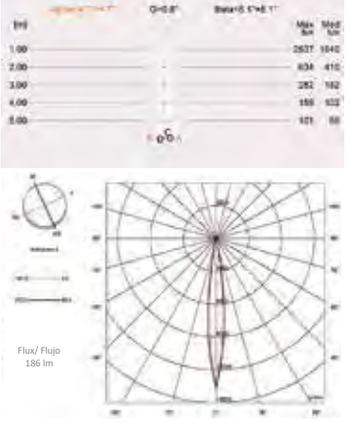

I1245 NIQ RECESSED PROJECTOR (PVC NICHE)

I1287 NIQ RECESSED PROJECTOR (STAINLESS STEELNICHE)

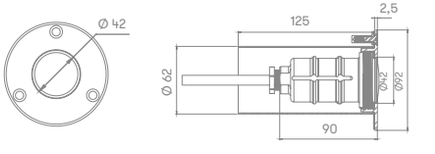

I1246 FITTED NIQ ADJUSTABLE PROJECTOR

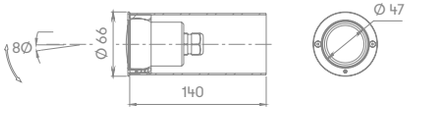



Niq Recessed Projector

Illumination

Fitted Niq Adjustable

Illumination

PROJECT VIEW







NANO PROJECTOR

Despite its small dimensions, this wall fitting has considerable light output. Ideal for lighting jets up to 2 meters high in ornamental fountains or it can be used underwater indoors and outdoors where small dimensions are required.

Made of AISI 316 stainless steel with protection degree IP68.

Consumption

Monocolour: 3W (4VA)
Multicolour: 3W (4VA)
MDMX: 3W (3VA)

Voltage

Monocolour: 12 Vac
Multicolour: 12 Vac
MDMX: 24 Vdc

Lumens

Monocolour: 250 lm
Multicolour: 150 lm
MDMX: 150 lm

Efficiency

Monocolour: 83,3 lm/W
Multicolour: 50 lm/W
MDMX: 50 lm/W

Life Span

L80 - 50.000h

Protection level

IP68

CODE	LIGHT	FACE PLATE	OPTIC	OPTION	ASTRALPOOL
I1234	**W** Cool white	Material	**N** Narrow	**DMX**	**I52**
I1252	**WW** Warm white	**P** Plastic	**M** Medium		
I1254	**M** Multicolour	**I** Stainless Steel	**W** Wide		
I1239	**MDMX** Multicolour DMX				
I1247		Shape			
		S Square			
		R Round			

CONTROL
I0828I52 Remote control
I0826I52 Modulator
I0831I52 Push-button
I0832DMXI52 DMX power supply
I0832DMXFEI52 DMX external power supply

NANO
Monocolour/ monocolor Optic W

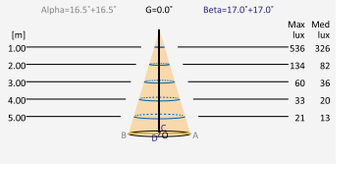

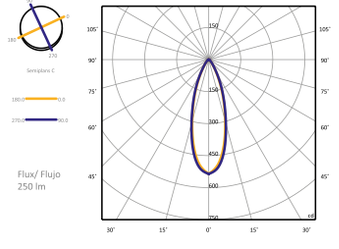

NANO
Monocolour/ monocolor Optic N

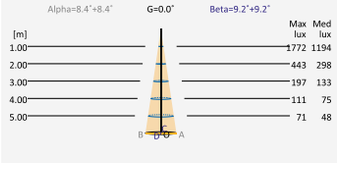

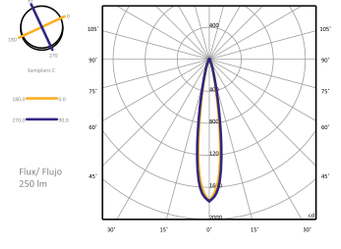

NANO
Multicolour/ multicolor Optic W

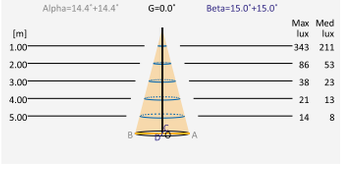

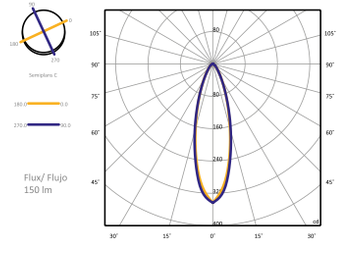

NANO
Multicolour/ multicolor Optic N

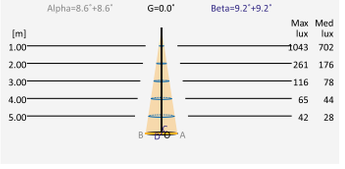

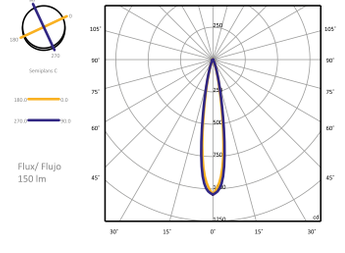

I1234 NANO PROJECTOR Ø40

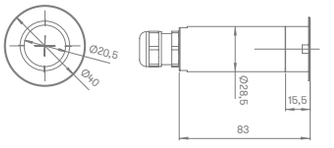

I1239 NANO PROJECTOR WITH JOINTS

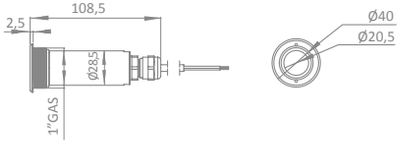

I1247 NANO PROJECTOR 1"

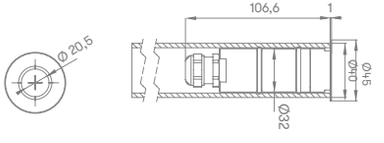

I1252 NANO PROJECTOR Ø70

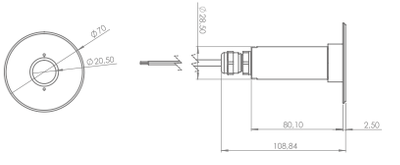

I1254 NANO PROJECTOR Ø80

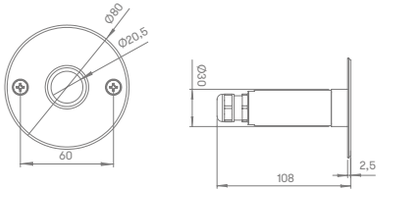



Nano Projector Ø40

Illumination

PROJECT VIEW







NEW PRODUCT

MINI / MINI + PROJECTOR

The MINI projector is the best option to illuminate ornamental fountains, small swimming pools and spas. Only 3 Leds are used, but due to its high level of lighting, it reaches similar levels to traditional lamps.It can be installed indiscriminately submerged or outside the water.

Possibility of intensive, intermediate or extensive lens.

MINI Projector Quick Couplin is the best choice for lighting corners, small pools and spas.

Directional Projector MINI is especially designed for fountains, gardens and decorative aquatic installations. It is supplied with screws and studs for fitting.

MINI Recessed Projector is conceived for installing on fountains and water spaces. Its glass lens and AISI 316 stainless steel trim are designed to 500 Kgr. static force.

Consumption	Mini	Mini +
Monocolour:	4W (6VA)	6W (9VA)
Multicolour:	4W (7VA)	6W (6VA)
MDMX:	4W (4VA)	6W (6VA)
MWDMX:	5W (5VA)	8W (8VA)
Voltage		
Monocolour:	12 Vac	12 Vac
Multicolour:	12 Vac	12 Vac
MDMX:	24 Vdc	24 Vdc
MWDMX:	24 Vdc	24 Vdc
Lumens		
Monocolour:	315 lm	550 lm
Multicolour:	186 lm	250 lm
MDMX:	186 lm	250 lm
MWDMX:	300 lm	430 lm
Efficiency		
Monocolour:	78,7 lm/W	91,66 lm/W
Multicolour:	46,5 lm/W	55 lm/W
MDMX:	46,5 lm/W	55 lm/W
MWDMX:	60 lm/W	53,75 lm/W
Life Span		
L80 - 50.000h		
Protection level		
IP68		

CODE	LIGHT	FACE PLATE	OPTIC	OPTION	ASTRALPOOL
I0306	**W** Cool white	Material	**N** Narrow	**DMX**	**I52**
I0307	**WW** Warm white	**P** Plastic	**M** Medium		
I0321	**M** Multicolour	**I** Stainless Steel	**W** Wide		
I0322	**MDMX** Multicolour DMX				
I0406	**MWDMX** Multicolour White DMX	Shape			
I0411		**S** Square			
I1226		**R** Round			
I1282					
I1285					
I1286					

CONTROL

I0828I52 Remote control
I0826I52 Modulator
I0826DMXI52 DMX Modulator
I0831I52 Push-button
I0832DMXI52 DMX power supply
I0832DMXFEI52 DMX external power supply

I0306 MINI PROJECTOR QUICK COUPLING
I0321 MINI+ PROJECTOR QUICK COUPLING

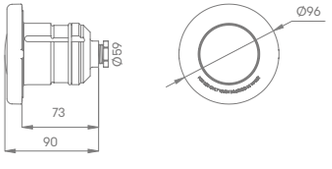

I0307 MINI PROJECTOR FOR SPAS
I0322 MINI+ PROJECTOR FOR SPAS

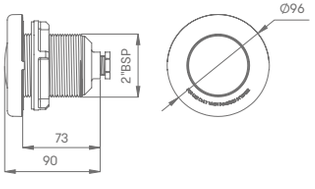

I0406 DIRECTIONAL PROJECTOR MINI
I0411 DIRECTIONAL PROJECTOR MINI+

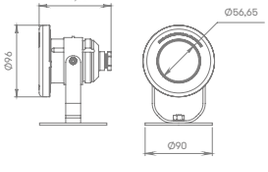

I1226 MINI RECESSED PROJECTOR
I1285 MINI RECESSED PROJECTOR SS
I1282 MINI+ RECESSED PROJECTOR
I1286 MINI+ RECESSED PROJECTOR SS

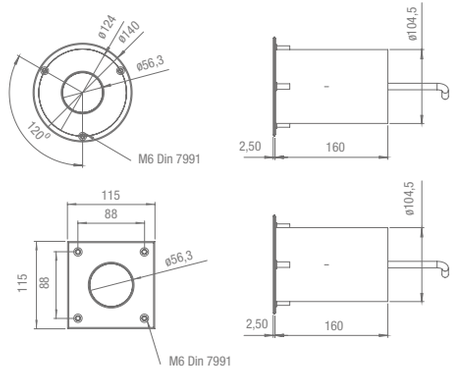



Mini Projector Quick Couplin / Mini +

Illumination



Directional Projector Mini / Mini +

Illumination



Mini Recessed Projector / Mini +

Illumination

PROJECT VIEW







MINI / MINI + PROJECTOR

MINI
Monocolour/ monocolor Optic W

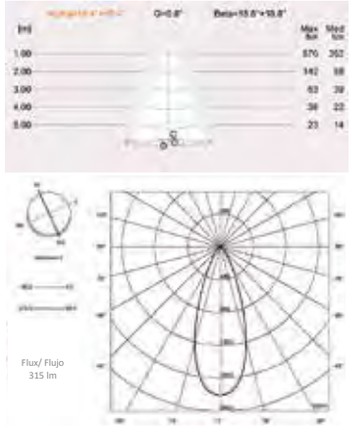

MINI
Monocolour/ monocolor Optic N

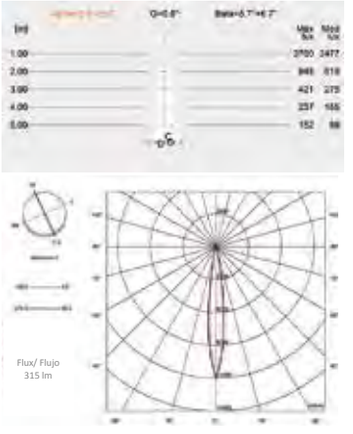

MINI
Monocolour/ monocolor Optic M

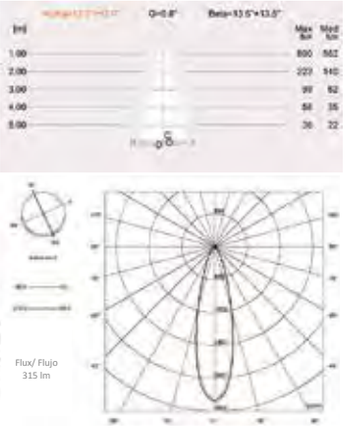

MINI
Multicolour/ multicolor Optic W

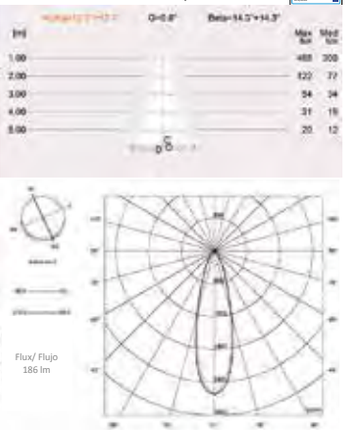

MINI
Multicolour/ multicolor Optic N

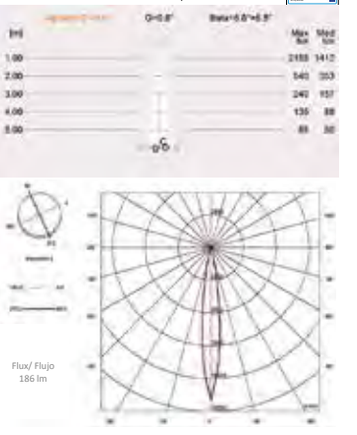

MINI
Multicolour/ multicolor Optic M

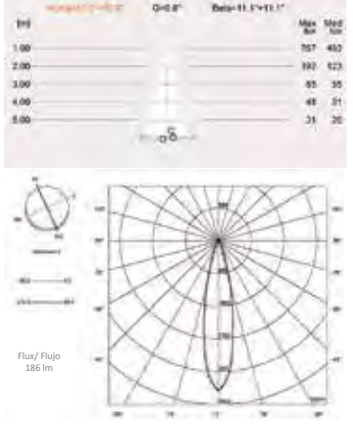

MINI
MWDMX/ MWDMX Optic W

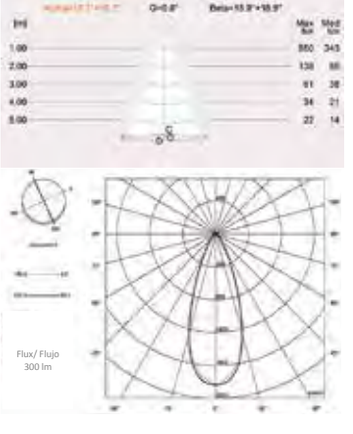

MINI
MWDMX/ MWDMX Optic N

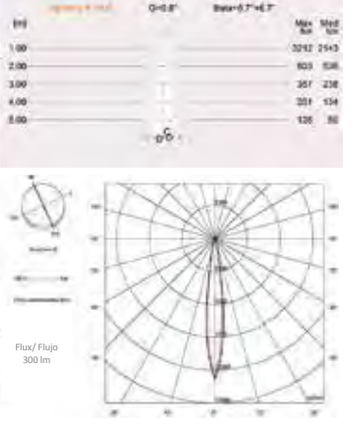

MINI
MWDMX/ MWDMX Optic M

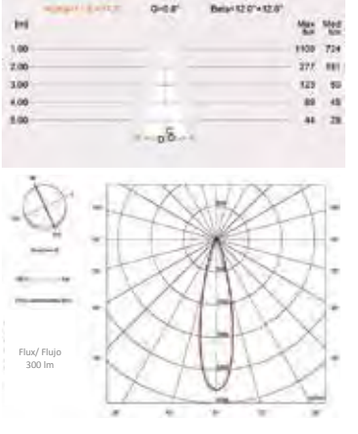

MINI +
Monocolour/ monocolor Optic W



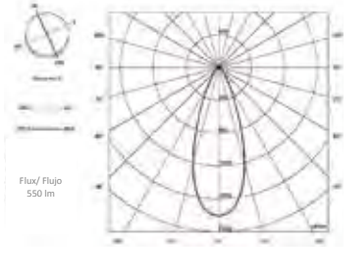

MINI +
Monocolour/ monocolor Optic M



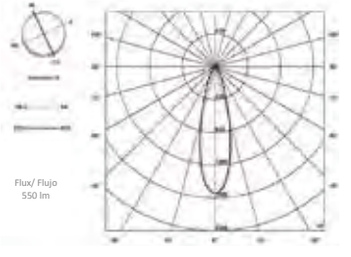

MINI +
Monocolour/ monocolor Optic N



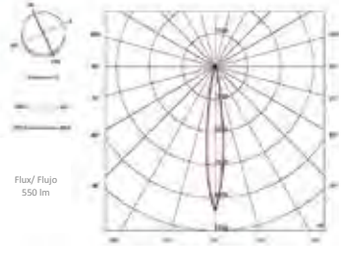

MINI +
Multicolour/ multicolor Optic W

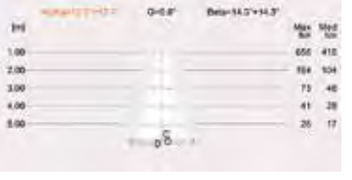

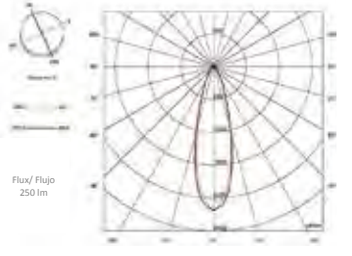

MINI +
Multicolour/ multicolorOptic M

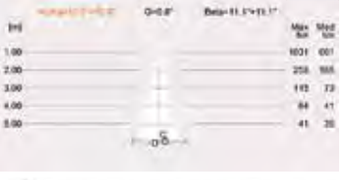

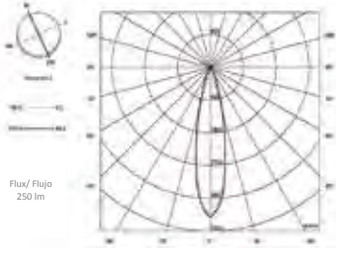

MINI +
Multicolour/ multicolor Optic N



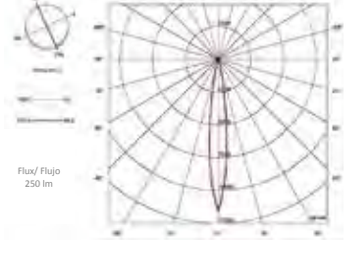

MINI +
MWDMX/ MWDMX Optic W



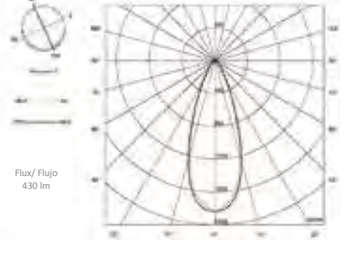

MINI +
MWDMX/ MWDMX Optic M

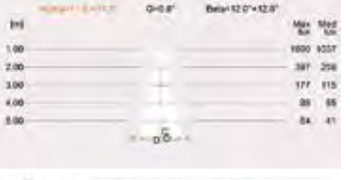

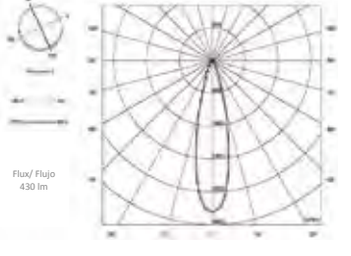

MINI +
MWDMX/ MWDMX Optic N

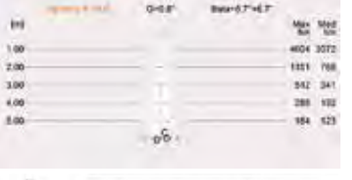

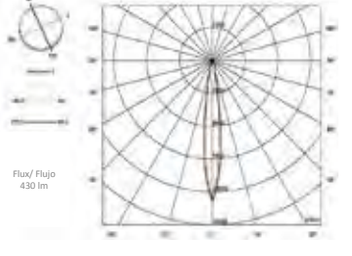

CIRCULAR Ø200

Projector designed for fitting directly to the jets of ornamental fountains, thus ensuring that they are properly illuminated and emit an even source of light. Has a stainless steel finish.

Possibility of intensive, intermediate or extensive lens.

CODE	LIGHT	OPTIC	OPTION	ASTRALPOOL
I1261 I1262 I1263 I1264 I1265 I1288	**W** Cool white **WW** Warm white (Upon Request) **MWDMX** Multicolour White DMX	**N** Narrow **M** Medium **W** Wide	**DMX**	**I52**

CONTROL

I0828I52 Remote control
I0826I52 Modulator
I0831I52 Push-button
I0832DMXI52 DMX power supply
I0832DMXFEI52 DMX external power supply

Circular Ø200
MWDMX/ MWDMX

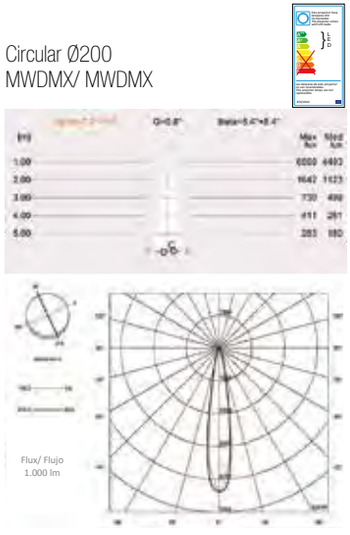

Circular Ø200
Monocolour/ monocolor

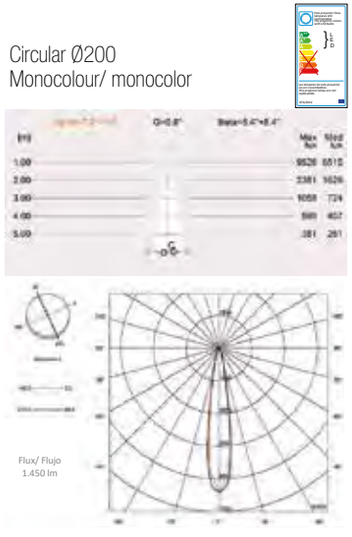

Consumption

Monocolour: 16W
MWDMX/: 16W

Voltage

24Vdc

Lumens

Monocolour: 1.450 lm
MWDMX: 1.000 lm

Efficiency

Monocolour: 91 lm/W
MWDMX: 62,5 lm/W

Colour

16.000.000

Life Span

L80 - 50.000h

Protection level

IP68

I1261 CIRCULAR Ø200 1" 1/2 THREAD

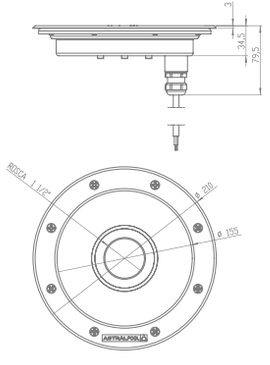

I1262 CIRCULAR Ø200 1" THREAD

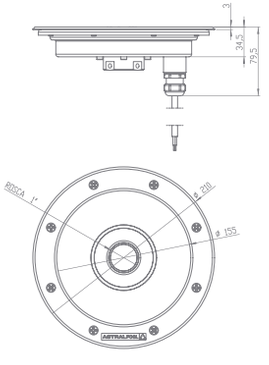

I1263 CIRCULAR Ø200 NO THREAD

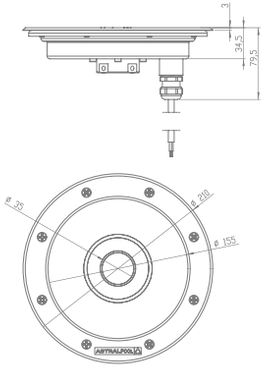

I1264 CIRCULAR Ø200 FLAT MOUNTING

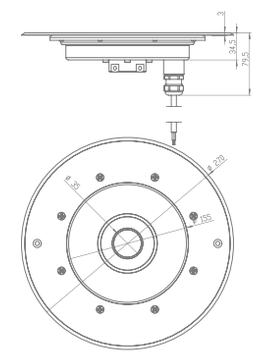

I1265 CIRCULAR Ø200 DRY FOUNTAIN

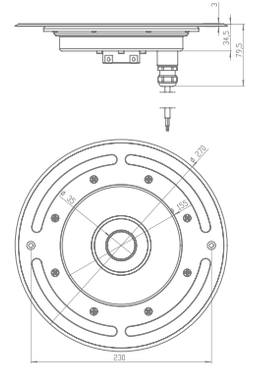

I1288 CIRCULAR Ø200 DRY FOUNTAIN Ø40MM

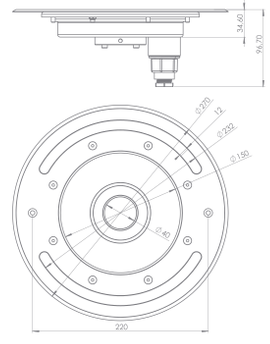



Circular Ø200 1” 1/2 THREAD

Illumination

PROJECT VIEW







CIRCULAR Ø300

A large projector with high luminous performance for fitting directly to the jets of ornamental fountains of up to 1 1/2". Made of stainless steel.

CODE	LIGHT	OPTIC	OPTION	ASTRALPOOL
I1255	**W** Cool white **WW** Warm white (Upon Request) **MWDMX** Multicolour White DMX	**N** Narrow **M** Medium **W** Wide	**DMX**	**I52**

CONTROL
I0828I52 Remote control **I0826I52** Modulator **I0831I52** Push-button **I0832DMXI52** DMX power supply **I0832DMXFEI52** DMX external power supply

Circular Ø300
Monocolour/ monocolor

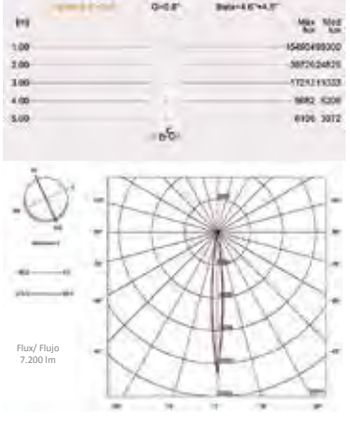

Circular Ø300
MWDMX/ MWDMX

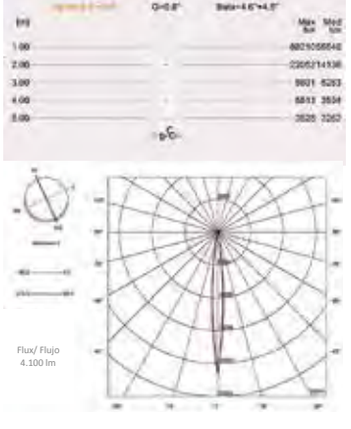

Consumption

Monocolour: 80W
MWDMX: 80W

Voltage

24Vdc

Lumens

Monocolour: 7.200 lm
MWDMX: 4.100 lm

Efficiency

Monocolour: 90 lm/W
MWDMX: 51 lm/W

Colour

16.000.000

Life Span

L80 - 50.000h

Protection level

IP68

I1255 CIRCULAR Ø300

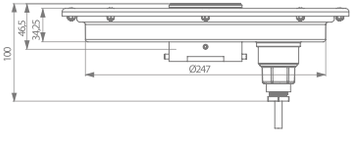

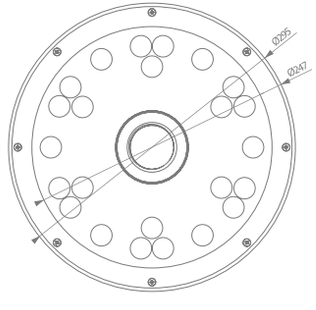



Circular Ø300

Illumination

PROJECT VIEW





HALOSPOT PROJECTOR

High-resistance projector, made with stainless steel. It is ideal for ornamental fountains an watter jets.
It should be installed completely submerged in water. It is provided with screws and studs for fitting.
Possibility of intensive, intermediate or extensive lens.

CODE	LIGHT	FACE PLATE	OPTIC	OPTION	ASTRALPOOL
I0403	**W** Cool white **WW** Warm white (Upon Request) **M** Multicolour **MWDMX** Multicolour White DMX	Material **P** Plastic **I** Stainless Steel Shape **S** Square **R** Round	**N** Narrow **M** Medium **W** Wide	**DMX**	**I52**

CONTROL

I0828I52 Remote control
I0826I52 Modulator
I0831I52 Push-button
I0832DMXI52 DMX power supply
I0832DMXFEI52 DMX external power supply

I0403 HALOSPOT PROJECTOR

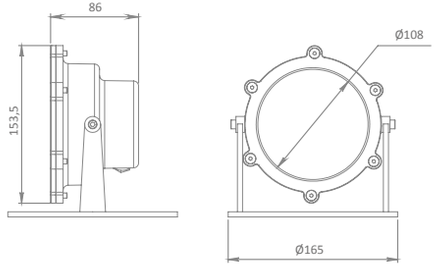

Consumption

Monocolour: 16W (23VA)
Multicolour: 22W (31VA)
MWDMX: 30W (30VA)

Voltage

Monocolour: 12 Vac
Multicolour: 12 Vac
MWDMX: 24 Vdc

Lumens

Monocolour: 1.450 lm
Multicolour: 1.100 lm
MWDMX: 1.750 lm

Efficiency

Monocolour: 91 lm/W
Multicolour: 50 lm/W
MWDMX: 58,33 lm/W

Life Span

L80 - 50.000h

Protection level

IP68



Halospot Projector

Illumination

PROJECT VIEW





HALOSPOT PROJECTOR

HALOSPOT
Monocolour/ monocolor

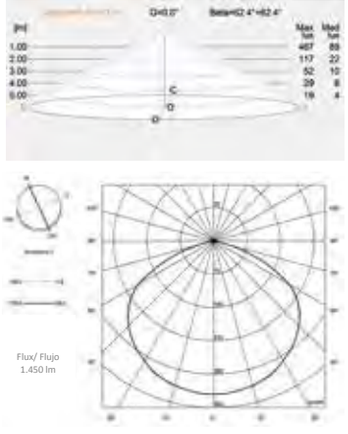

HALOSPOT
Monocolour/ monocolor Optic W

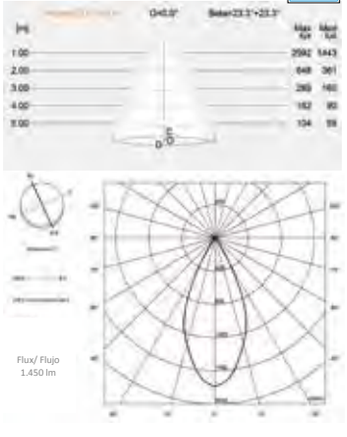

HALOSPOT
Monocolour/ monocolor Optic N

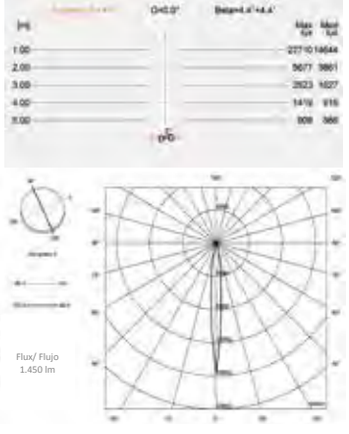

HALOSPOT
Monocolour/ monocolor Optic M

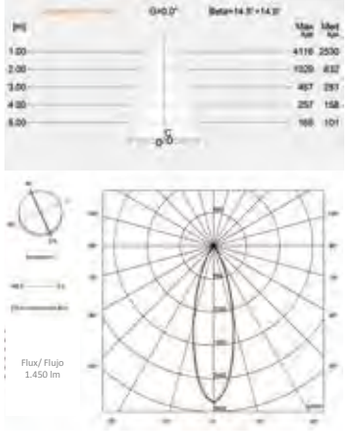

HALOSPOT
Multicolour/ multicolor

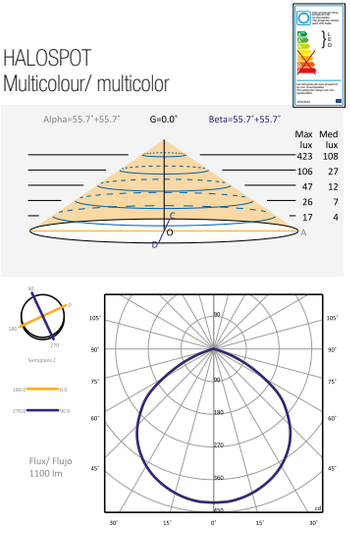

HALOSPOT
Multicolour/ multicolor Optic W

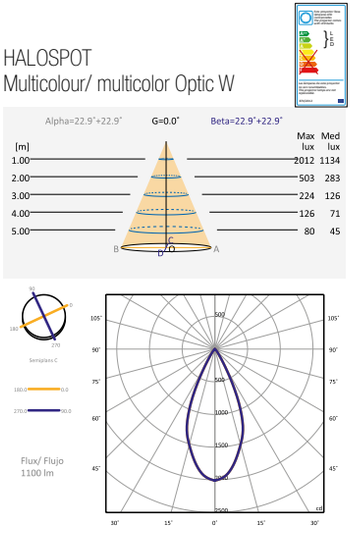

HALOSPOT
Multicolour/ multicolor Optic N

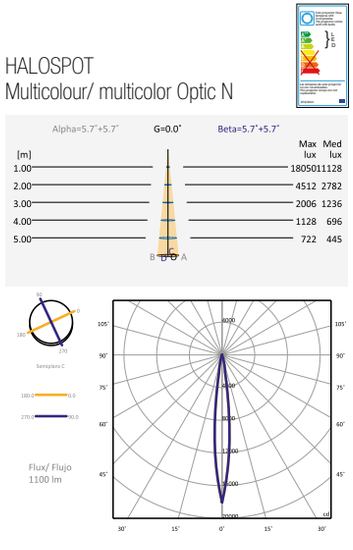

HALOSPOT
Multicolour/ multicolor Optic M

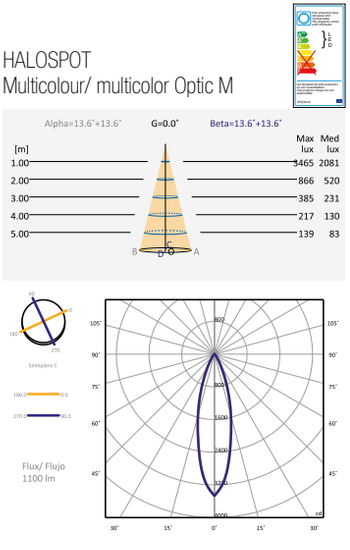

HALOSPOT
MWDMX/ MWDMX

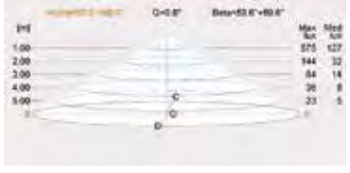

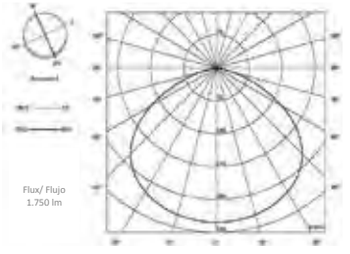

HALOSPOT
MWDMX/ MWDMX Optic W



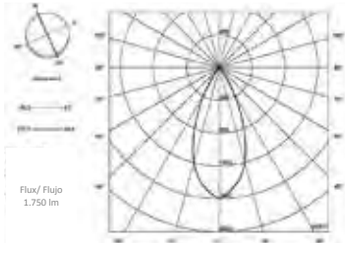

HALOSPOT
MWDMX/ MWDMX Optic N

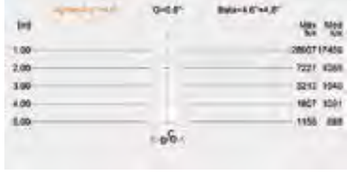

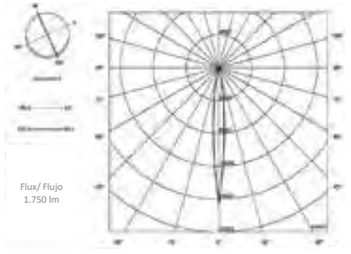

HALOSPOT
MWDMX/ MWDMX Optic M



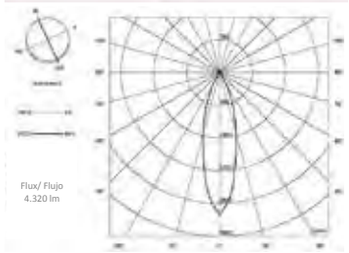



KIBELE PROJECTOR

A large projector with high luminous performance. Made of stainless steel.
Ideal for installation in ornamental fountains with jets with high flow rates.

Possibility of intensive, intermediate or extensive lens.

It is supplied with screws and wall plugs.

CODE	LIGHT	FACE PLATE	OPTIC	OPTION	ASTRALPOOL
10407	**W** Cool white **WW** Warm white (Upon Request) **M** Multicolour **MWDMX** Multicolour White DMX	Material **P** Plastic **I** Stainless Steel Shape **S** Square **R** Round	**N** Narrow **M** Medium **W** Wide **MW** Multicolour M+W	**DMX**	**I52**

CONTROL
I0828I52 Remote control **I0826I52** Modulator **I0831I52** Push-button **I0832DMXI52** DMX power supply **I0832DMXFEI52** DMX external power supply

I0407 KIBELE PROJECTOR

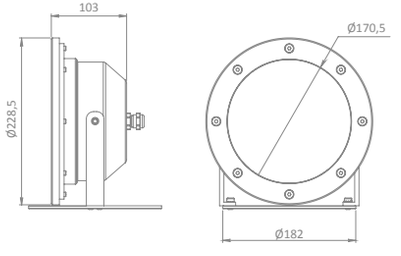

Consumption

Monocolour: 58W (60VA)
Multicolour: 48W (64VA)
MWDMX: 60W (60VA)

Voltage

Monocolour: 12 Vac
Multicolour: 12 Vac
MWDMX: 24 Vdc

Lumens

Monocolour: 4.320 lm
Multicolour: 2.544 lm
MWDMX: 3.100 lm

Efficiency

Monocolour: 74,4 lm/W
Multicolour: 53 lm/W
MWDMX: 56 lm/W

Life Span

L80 - 50.000h

Protection level

IP68



Kibele Projector

Illumination

PROJECT VIEW





KIBELE PROJECTOR

KIBELE
Monocolour/ monocolor

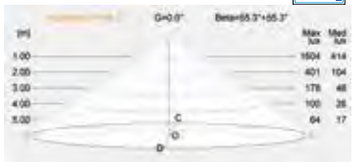

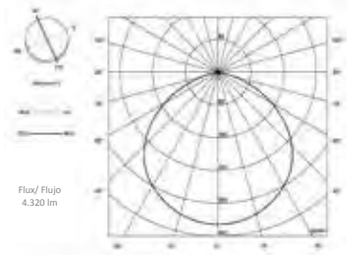

KIBELE
Monocolour/ monocolor Optic W



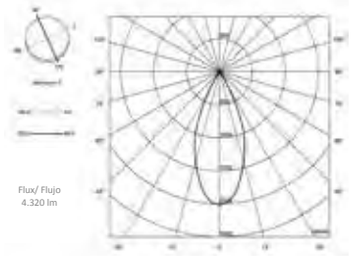

KIBELE
Monocolour/ monocolor Optic M



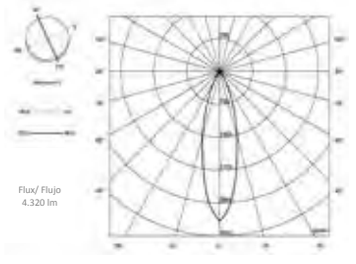

KIBELE
Monocolour/ monocolor Optic N



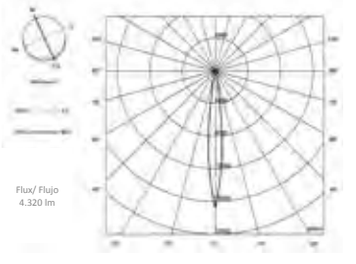

KIBELE
Multicolour/ multicolor

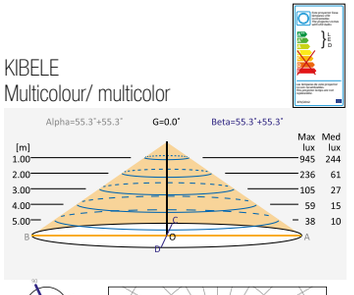

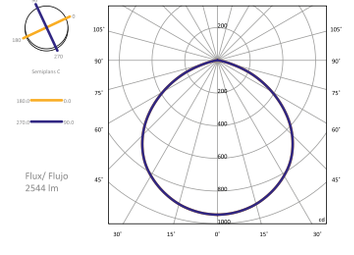

KIBELE
Multicolour/ multicolor Optic W

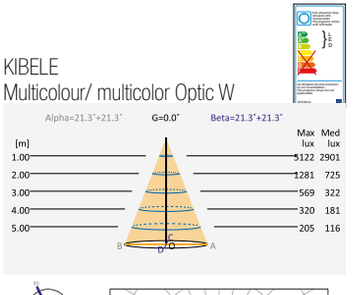

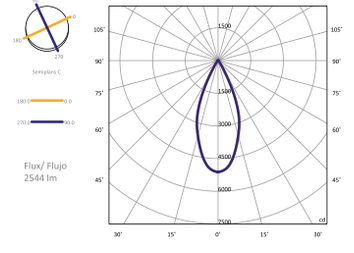

KIBELE
Multicolour/ multicolor Optic M

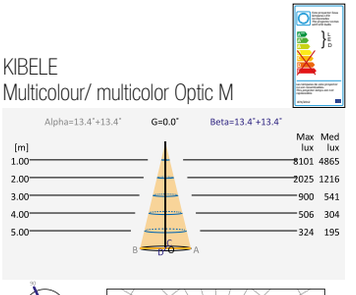

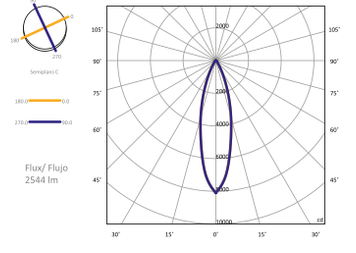

KIBELE
Multicolour/ multicolor Optic N

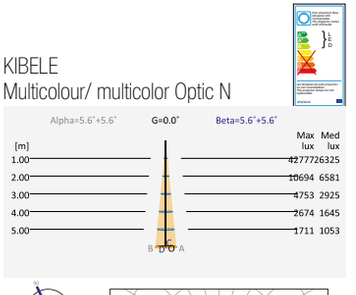

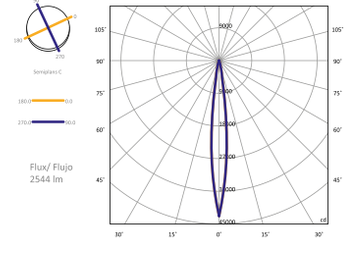

KIBELE
MWDMX/ MWDMX

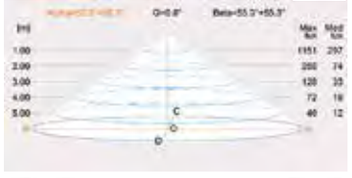

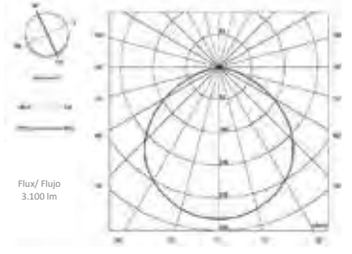

KIBELE
MWDMX/ MWDMX Optic W



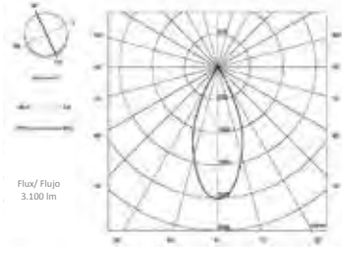

KIBELE
MWDMX/ MWDMX Optic M



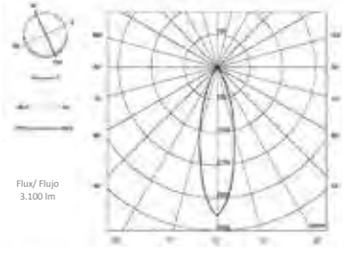

KIBELE
MWDMX/ MWDMX Optic N

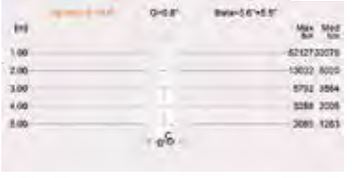

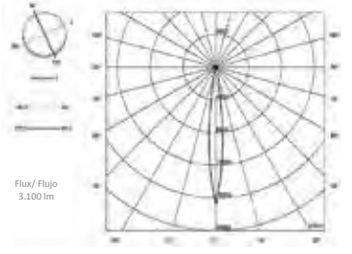



NEW DESIGN

LINEAR ESCALA PROJECTOR

Strip LED projector featuring an AISI 316 stainless steel profile.

A multipurpose light that may be combined, installed and used in many different ways. Highly versatile, it is an ideal decorative light for use outdoors and in water features. Includes fastening supports.

CODE	LIGHT	LENGTH	OUTPUT	OPTION	ASTRALPOOL
I1320	**W** Cool white **NW** Neutral white **A** Amber **MWDMX** Multicolour White DMX **MW** Multicolour M+W	**05** 0,50m **10** 1m	T 1 output 0 2 outputs	**DMX**	**I52**

CONTROL
Monocolour I0847152 Power supply **DMX** **I0832DMXI52** DMX-MW Power supply **I0832DMXFEI52** DMX Ext. power supply

Consumption

W: 1m. 12W - 0,5mm 6W
MWDMX: 1m. 16W - 0,5m. 8W

Voltage

24 Vdc

Lumens

W: 1m. 500lm - 0,5m. 250lm
MWDMX: 1m. 640lm - 0,5m. 320lm

Efficiency

W: 1m. 42lm/W - 0,5m. 40lm/W
MWDMX: 1m. 40lm/W - 0,5m. 40lm/W

Colour

L80 - 60.000h

Protection level

IP68

ESCALA (0,5 m)
Monocolour/ monocolor

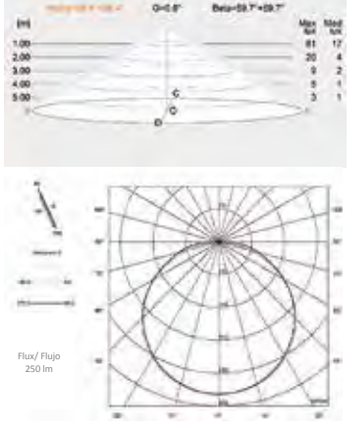

ESCALA (1 m)
Monocolour/ monocolor

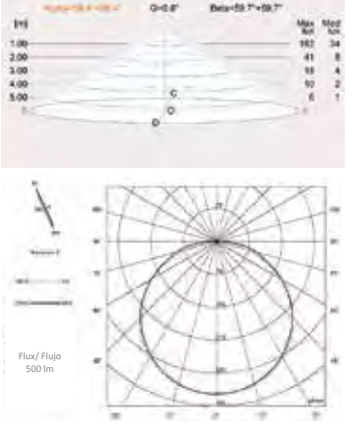

ESCALA (0,5 m)
MWDMX/ MWDMX

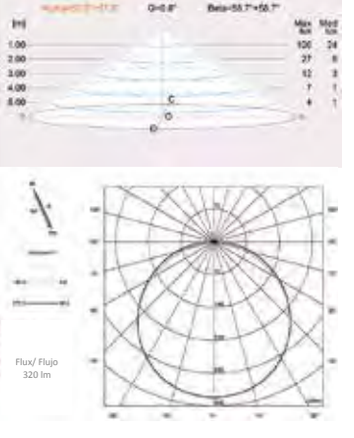

ESCALA (1 m)
MWDMX/ MWDMX

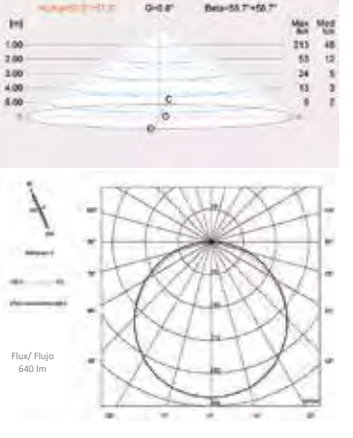

I1320MW100

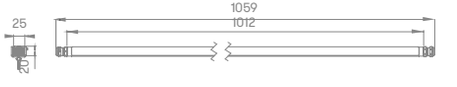

I1320MW050

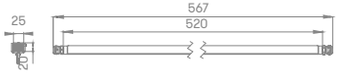



PROJECT VIEW







ADJUSTABLE LINEAR PROJECTOR

NEW PRODUCT

Adjustable 13 W linear projector for both indoor and outdoor areas. Made from aluminum and white DMX, this multicolour projector is perfect for wall washing.

CODE	LIGHT	FACE PLATE	OPTION	ASTRALPOOL
I1279	**W** Cool white **WW** Warm white **MWDMX** Multicolour White DMX	Material **P** Plastic **I** Stainless Steel Shape **S** Square **R** Round 0m	**N** Narrow **M** Medium **W** Wide	**I52**

CONTROL
Multicolour **I0826** Modulator **I0828** Remote control **I0831** Push-button **DMX** **I0832DMX** DMX power supply **I0832DMXFE** DMX external power supply

Consumption

MWDMX: 13W

Voltage

24 Vdc

Lumens

1.000lm

Efficiency

71,43 lm/W

Life Span

L80 - 60.000h

Protection level

IP65

Adjustable linear projector
MWDMX/ MWDMX





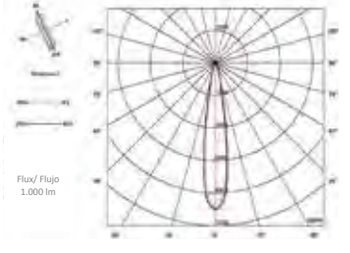

I1279 LINEAR ADJUSTABLE PROJECTOR

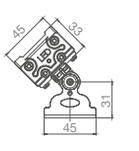

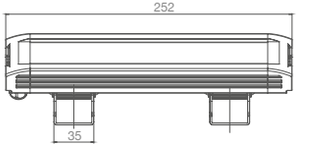



Linear Adjustable Projector

Illumination

PROJECT VIEW

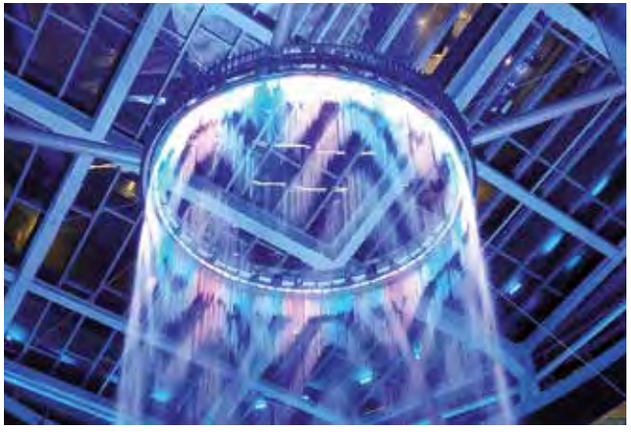



ILLUMINATION

STARRY SKY EFFECT



The installation of STARRY SKY in pools clad with ceramic tiles—other than mosaic pieces—glass sheets or tiles, marble and other natural stones, is the most effective technique to display the magic of fiber optics underwater. Each Kit consists in 40 bright points (I1089) or 150 bright points (I1090) with excellence quality. The kit works in 12Vac powered fixtures don't have minimum-distance to water restrictions.

CODE	LIGHT
I1089	**W** White **WW** Warm white
I1090	**W** White **WW** Warm white **M** Multicolour

I1089 STARRY SKY KIT 40 STRANDS

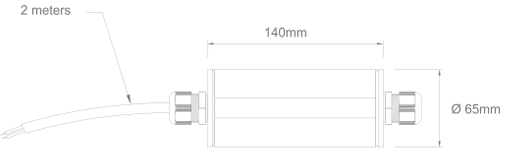

I1090 STARRY SKY KIT 150 STRANDS 6-14m

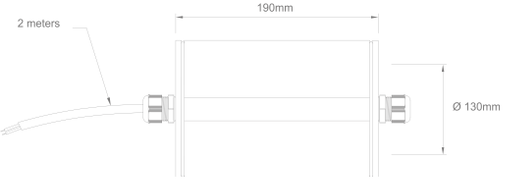

PROJECT VIEW

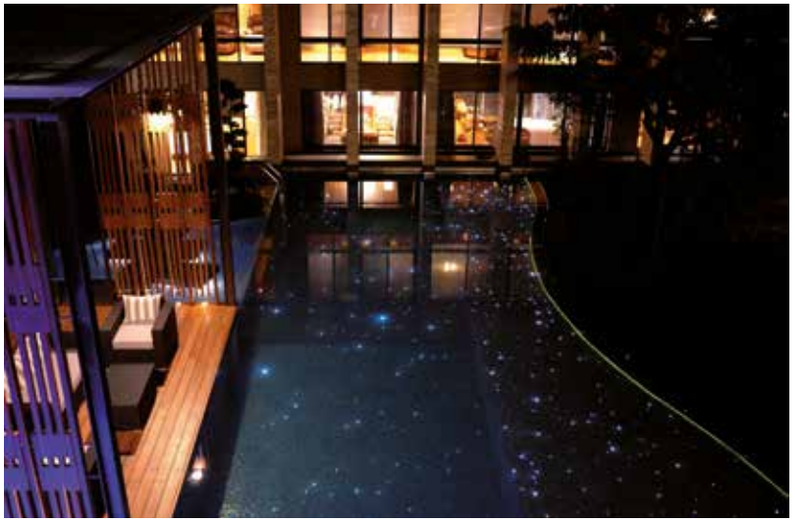





Family of small connectors ideal for connections if space is limited. With an IP68 rating of up to 2 bar and metal inserts for the connections.

Pole numbers

4

Cable with

Max 2.5 mm^2

Min-Max cable diameter

7.0 mm - 12.0 mm

Maximum current

16A

Maximum voltage

48V

Working temperature

-40°C to +125°C

Material

PA66GF UL94 V0 GWT 960°C

Protection level

IP68

CE RoHS

I0892
4 pole connection
(Kit 5 unities + 2 keys)

I0912
Air connector IP68 4 poles

I0913
Air connector IP68 4 poles
XDRY

I0914
Key for aerial connector

I0916
IP68 connector T3 poles



I0892 4 POLE CONNECTION (KIT 5 UNITIES + 2 KEYS)

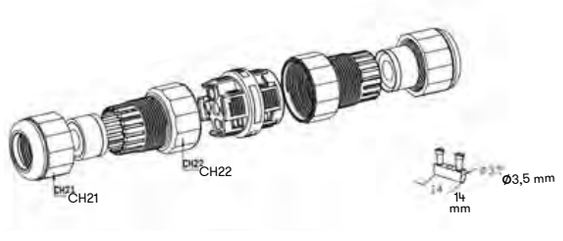

ILLUMINATION

ONDMX CONTROL SYSTEM

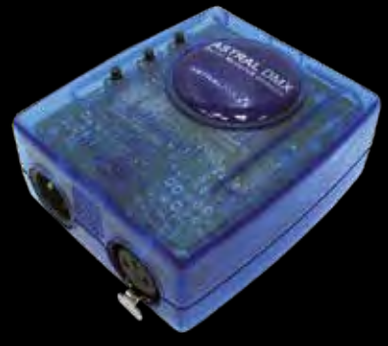

Total control system of illumination by PC or through a programmable and autonomous module.

It is composed by the OnDMX module (USB-DMX interface) and an intuitive software, it grants to the user a total control of a projector or group of projectors.

It allows the colour choice among more than 16 million colours.

The system turns into the ideal solution for the practically indefinite creation of scenes of duration with spectacular results.

10834152 ONDMX CONTROLLER

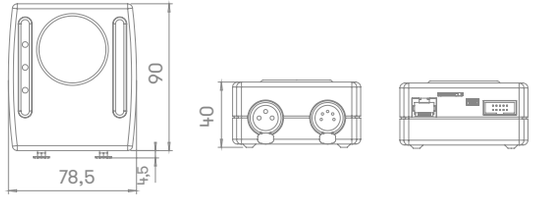

ILLUMINATION

ONDMX PRO CONTROL SYSTEM



System that complements the Total OnLED system, of the Modulator.

With it you will be able to control the following actions:

- Switching the lamps on and off
- Changing colour
- Changing colour sequence
- Speed of colour sequence
- Switching off function (sleep)
- Synchronises water, light and sound.

10835152 ONDMX PRO CONTROLLER

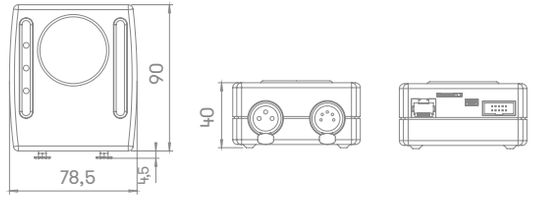

This power pack can handle up to 9 projectors separately (27 DMX channels) or grouped together (3 DMX channels). It can be directly plugged into a 230 V AC power supply. Internal 60 W power adapter included.

I0832DMXI52 DMX DRIVER ONLED POWER SUPPLY

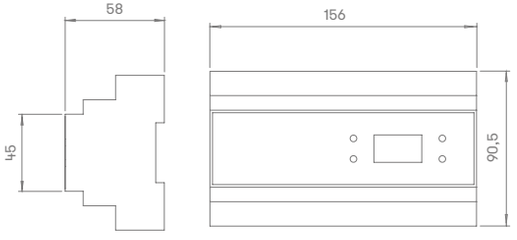

ILLUMINATION

DMX DRIVER POWER SUPPLY



The power supply can supply up to 9 projectors individually (27 DMX channels) or together (3 DMX channels). It is connected directly to 230V AC. External power supply required. Maximum Power 400 VA per unit.

I0832DMXFEI52 DMX DRIVER ONLED EXTERNAL POWER SUPPLY

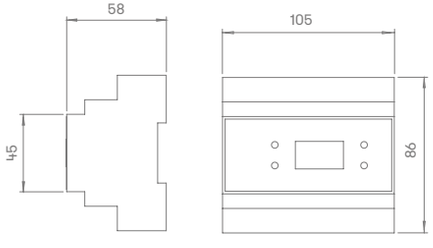

ILLUMINATION

DMX DRIVER EXTERNAL POWER SUPPLY



ILLUMINATION

ONLED MODULATOR



Total OnLED System, with which the switching on and off of the lamp can be controlled, changes colour and programme and timers to switch off.

I0826I52	ONLED MODULATOR
I0827I52	ONLED MODULATOR 1-110V

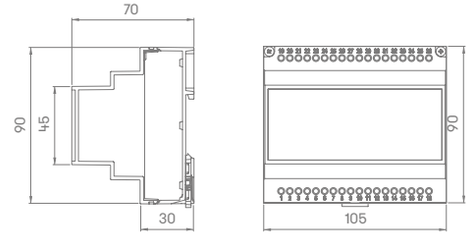

ILLUMINATION

ONLED REMOTE CONTROL



System that complements the Total OnLED system, of the Modulator.
With it you will be able to control the following actions:
- Switching the lamps on and off
- Changing colour
- Changing colour sequence
- Speed of colour sequence
- Switching off function (sleep)

I0828I52	ONLED REMOTE CONTROL

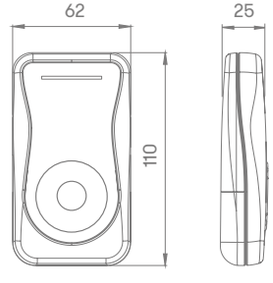

The OnLED WiFi Access Point installed next to the modulator enables broadband connections to be made with smartphone and tablet devices.

By downloading the OnLED App onto your smartphone or tablet (using an Android or iOS system), you will be able to control your OnLED lamps and projectors.

10876152	ONLED WIFI ACCESS POINT
10877152	ONLED MODULATOR + ONLED WIFI ACCESS POINT 230V
10878152	ONLED MODULATOR + ONLED WIFI ACCESS POINT 120V

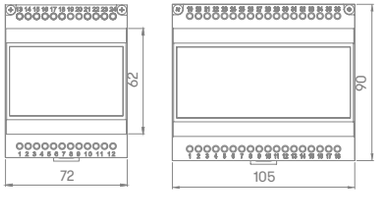

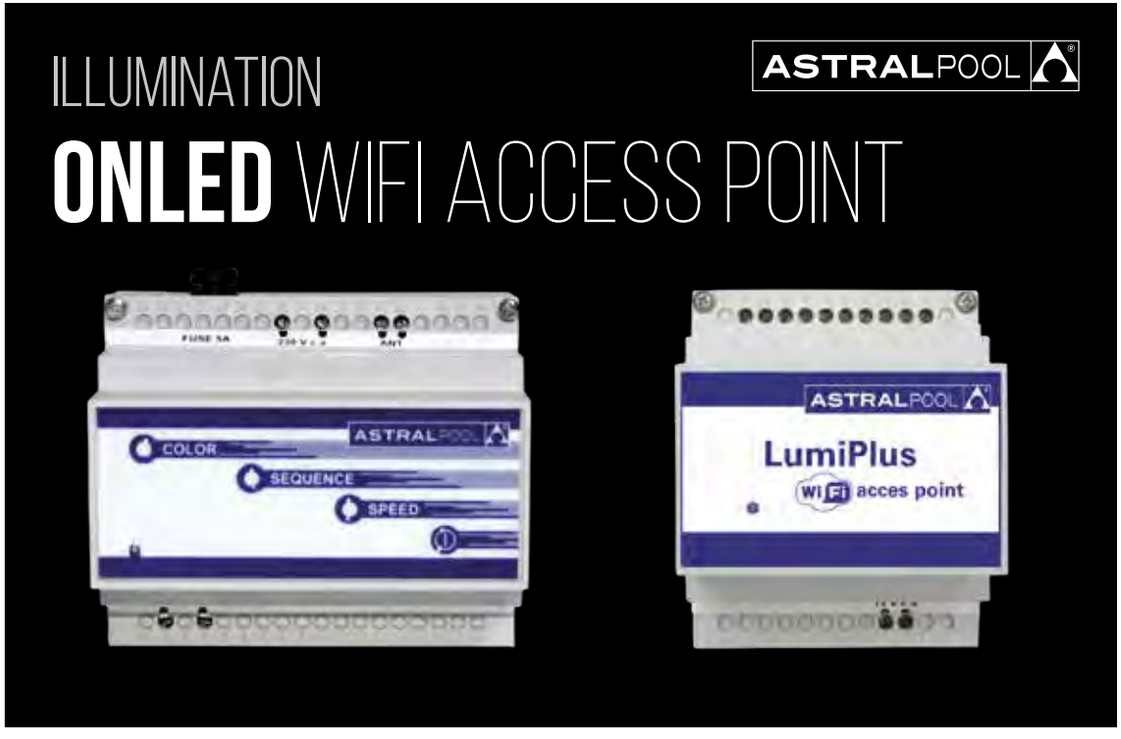

Application for controlling any OnLED lamp or projector from smartphones/tablets using an Android or iOS system (iPhone/iPad).

By free downloading the OnLED onto your smartphone or tablet, you will be able to change the colours, sequences, speed, and time you wish to switch off your OnLED lamps and projectors.

Avaible on:

Available on the App Store

ANDROID APP ON Google play

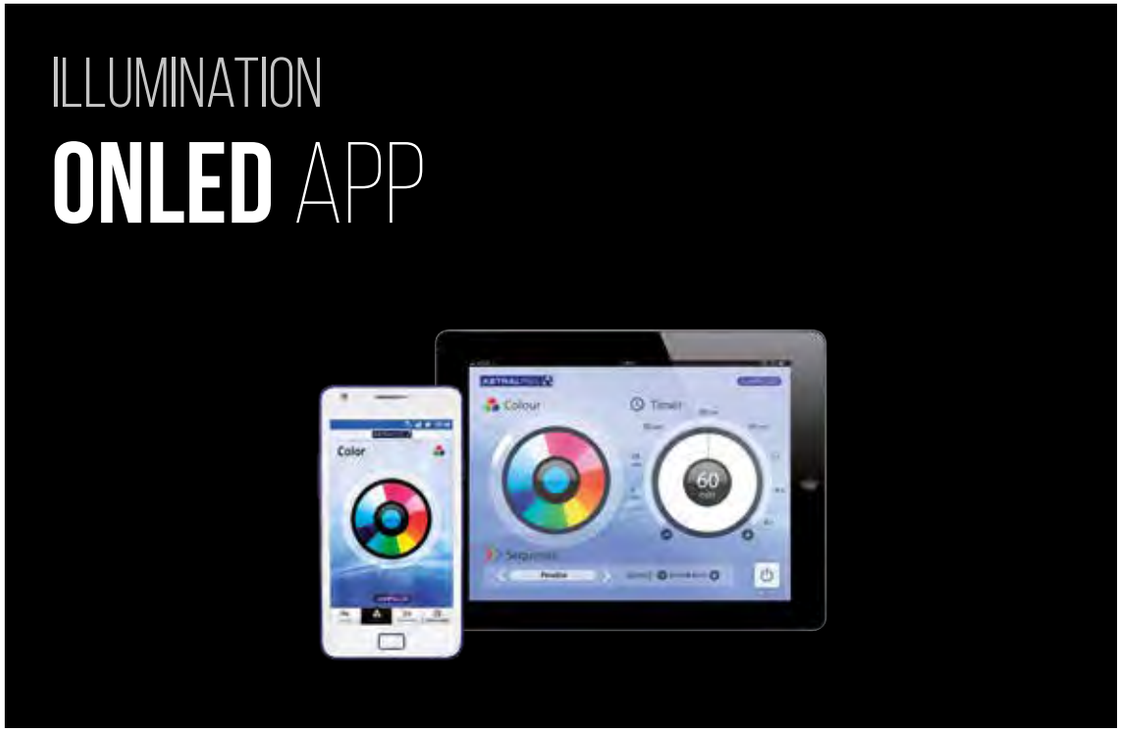

ILLUMINATION
POWER SUPPLY



Power supply by LED tecnhology products, especially designed for use in aquatic installations liks pools or fountains.

I0898	Power supply 24VDC 120W
I0899	Power supply 24VDC 240W
I0847	Power supply 24VDC 480W
I0908	Power supply 24VDC 960W

ILLUMINATION
SAFETY TRANSFORMERS



Single-phase Safety Transformers, especially designed for use in aquatic installations like pools or fountains.

With the protection degree IP20 or more, primary of 230V AC and secondary of 12-13-14V AC.

I0820	Safety transformer IP20 350 VA
I0821	Safety transformer IP20 130 VA
I0822	Safety transformer IP65 350 VA
I0823	Safety transformer IP20 700 VA

BASIC ONLED

Electric diagram that is obtained through a Pushbutton (n/c) + Safety transformer. The size of the transformer depends on the number of spotlights that are installed and their consumption. For example, if it has to power 5 24W spotlights, the transformer should be 125W. An input of 12V AC must reach the lamp. With every click, it changes colour or program, offers a range of 7 colours, as well as 7 colour changing programs.

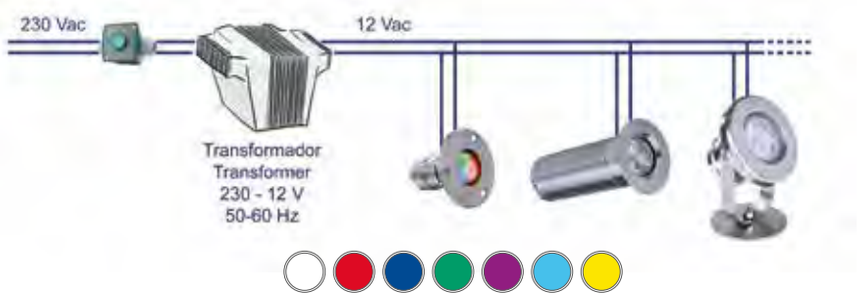

TOTAL ONLED

El Outline based on the OnLED Modulator, for increasing the number of colours and sequences of the spotlights. With it, it is possible to turn the spotlight on and off, change 12 colours and 8 sequences and control the speed of the sequences and the power off timer. The Modulator also has an antennae with that can reach up to 50m. with which it can be synchronized with the OnLED Remote Control (10828152). The Modulator should be installed before the safety transformer and is connected to VAC through two terminals indicated as RED and is connected to the transformer primary through two terminals indicated with TRF. It is recommended to install the Modulator ensuring it is protected from corrosive environments.



ON DMX

Those that want total control of the lighting can use the spotlights with DMX adaptation and OnDMX Control, and then they can independently control all the spotlights, and obtain more than 16.000.000 colours and infinite sequences. Each driver handles 27 DMX channels.

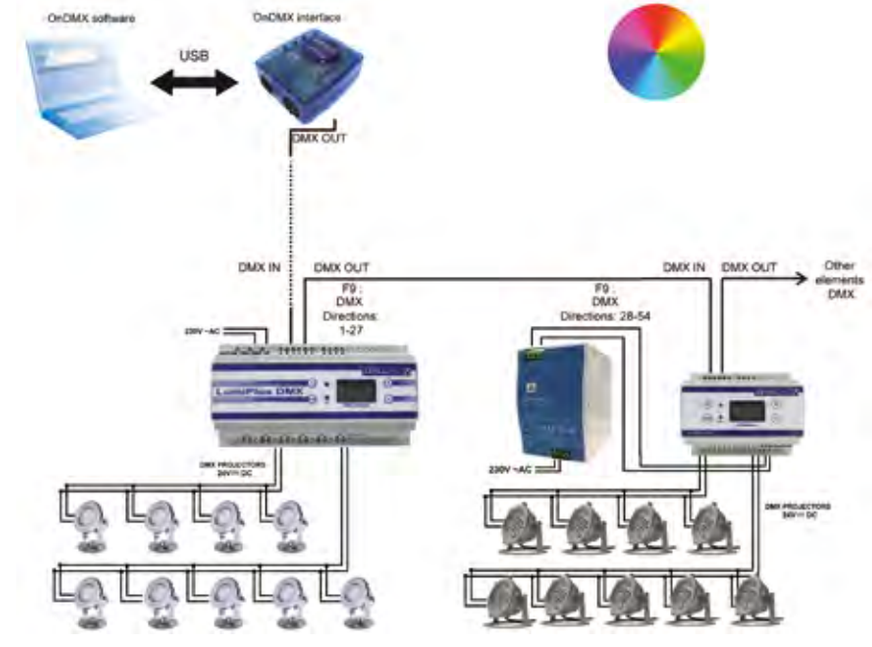

ILLUMINATION

V:NANO

NEW PRODUCT



Made even for the roughest environments, the V:Nano represents Syncronorm's smart solution for smaller and more intimate fountain show installations. The V:Nano 512 or 1024 "music" show controller is a DIN-rail fan-less & ruggedized embedded system with a highly efficient low power CPU chipset.

The V:Nano can withstands wider temperature ranges while featuring DMX 512/1990 ports, an isolated Ethernet port with 10/100 Mbit, a micro SD card slot and a 2×16 LCD segment-display.

A perfect match for smaller stand-alone fountains as well as musical fountain installations, both feature 8×digital I/O's.

The V:Nano is fully compatible with our fountain control system Depence. Easily enhance your workflow by uploading shows via SD card or your local network.

Key Features:

- DIN-Rail Mounting
- Scheduler
- Full RDM Support
- Sensor Connectivity
- Remote Control
- V:Nano Scripting
- SD-Card Memory
- Music Playback

V:NANO	72255 V:Nano 512	72256 V:Nano 1024 Music
Dimensions	160×90×85 mm DIN Rail	
Weight	0.33 kg	
Protection Class	IP 20	
Power Supply	15..24V DC / 8W	
Operation Temperature	0..40°/ 0..80% humidity	
Certification	CE	
Outputs	1× DMX-RDm 512ch	2× DMX-RDM 1024ch
	-	3.5mm Audio
	8× Digital Output (24V DC, max 1A)	
Inputs	8× Digital Input (max 30V DC)*	
Audio Playback	No	Yes
Memory	microSD Card	

V:NANO

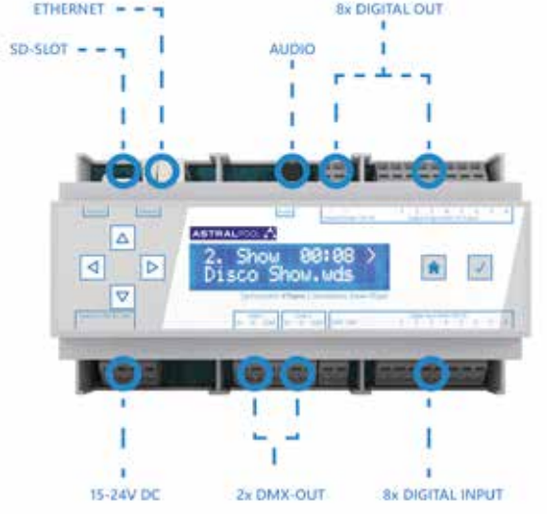

Next to Depence², our brand-new software system, we also have redesigned our top-level standalone show controller, the V:Server.

Alongside a new 19inch rack aluminium case it now features a touch screen interface on the front-panel next to a multicolor LED Logo.

The V:Sever3-Touch also comes with integrated optical isolated digital and analog I/Os to directly connect sensors and triggers.

The new node-based logic system of Depence² offers you maximum flexibility for any kind of interactive installation. Pre-existing Depence projects are still fully compatible as well.

The V:Server3-Touch will support projects created in former versions of Depence further on. With high performance and most stable connectivity, the V:Server still remains the perfect choice for running multimedia shows, while offering full ArtNet & RDM support as well as timecode features, and much more.

Key Features:

- BMI – Logic Automation
- Scheduler
- Touch-optimized HMI/Live Panel
- Timecode I/O
- DMX-RDM Support
- ArtNET RDM Support
- Sensor Connectivity
- Remote Access
- Music Playback



V:SERVER3-TOUCH

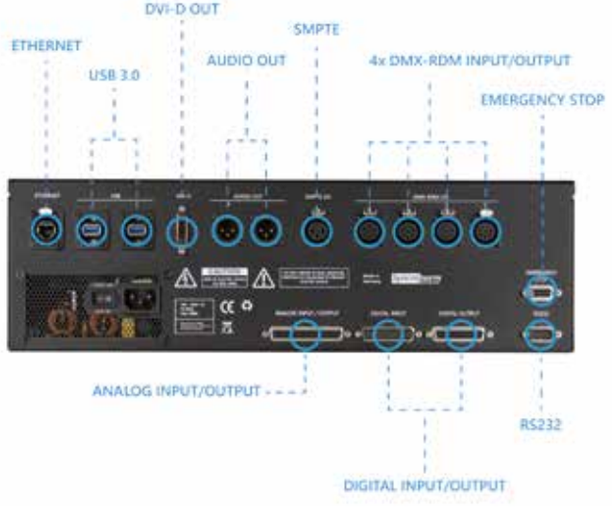

V:SERVER3-TOUCH	
Dimensions	19" 3HE 330mm depth
Weight	8.5kg
Protection Class	IP 20
Power Supply	110 / 230V @ 50Hz
Operation Temperature	0..40° / 0..80% humidity
Certification	CE
Connectors	4× DMX RDM XML-5 Pin, 1× RJ45 Ethernet, 2× XLR 3-Pin Symmetric Audio, 1× DVI-Out, 1× SMPTE XLR 3-Pin, 1× RS232, 3× USB 2.0, 1× Emergency Stop, 8× Digital Input, 8× Digital Output, 12× Analog I/O
Memory	120 GB solid state hard drive

LEVEL CONTROL SYSTEM

This control system provides a complete solution for controlling the water level in any fountain. This system makes it possible to fill a fountain automatically and acts as a security system for pumps if a fountain's water level drops too low.

The level control sensor is a very robust model that is resistant to oxidation and made entirely of AISI 316 stainless steel.

In the case of the Level Control Sensor Adjustable, the costumer receives the product with an standard and equal length on all rods, in order that the costumer adjusts this length according to the installation.

LEVEL CONTROL SENSOR Code: 66636	
Dimensions (L x W x H) [mm]	101 × 55 × 177
Level range [mm]	1000
Difference between levels [mm]	20
Number of electrodes	5
Cable included	5 × 1 10 m
Material	AISI 316 stainless steel
Weight [kg]	2,3
Protection rating	IP 68

LEVEL CONTROL UNIT Code: 66637	
Dimensions (L x W x H) [mm]	53 × 66 × 92
Voltage [V]	230 VAC
Electrode inputs	5
Outputs	2 relay outpus up to 8A
Indicator led	1 power, 2 outputs
Material	Plastic housing
Mounting	DIN rail
Protection rating	IP20

LEVEL CONTROL SENSOR ADJUSTABLE Code: 67444	
Dimensions (L x W x H) [mm]	101 × 55 × 1046
Level range [mm]	1000
Difference between levels [mm]	20
Number of electrodes	5
Cable included	5 × 1 10 m
Material	AISI 316 stainless steel
Weight [kg]	2,6
Protection rating	IP 68

LEVEL CONTROL SENSOR
Code: 66636

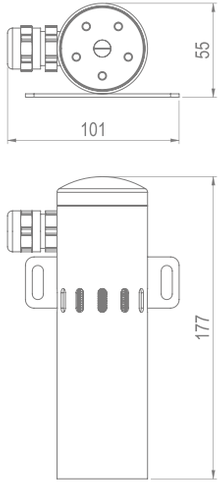

LEVEL CONTROL UNIT
Code: 66637

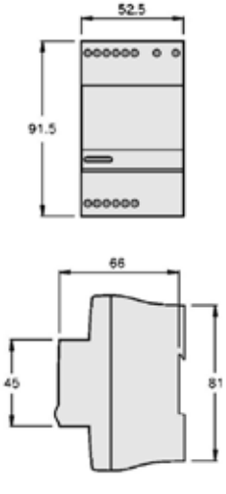

LEVEL CONTROL SENSOR
ADJUSTABLE Code: 67444

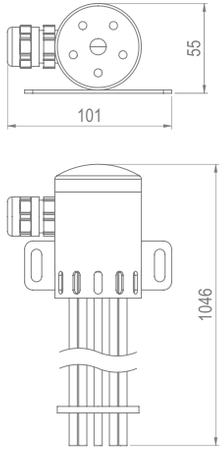







Level Control System

Complementary Products

WIND CONTROL SYSTEM

This wind control system is the best way of avoiding water loss from jets, thus preventing the area around a fountain and the spectators of a fountain display from getting wet due to the action of the wind.

It can be run in three modes depending on wind speed: normal, reduced fountain jet height and off in case of very strong wind.

WIND CONTROL SENSOR Code: 66577	
Dimensions (L x W x H) [mm]	100 × 100 × 135
Range [m/s]	2 - 55
Voltage [V]	5 - 15 VDC
Output [Hz]	0 – 210
Cable included	3 × 0,5 20 m
Material	ABS
Weight [kg]	1,2
Protection rating	IP 65

WIND CONTROL SENSOR

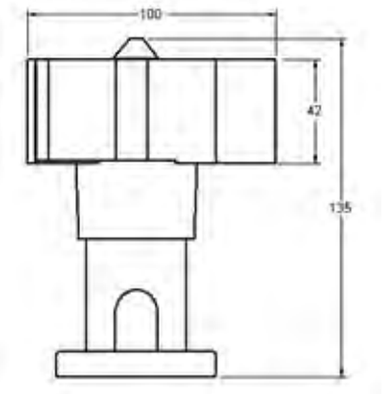

WIND CONTROL UNIT Code: 66578	
Dimensions (L x W x H) [mm]	53 × 66 × 92
Range [m/s]	Adjustable
Voltage [V]	230 VAC
Inputs	PNP/NPN or potential free contact
Outputs	3 relay outpus up to 6A
Display	LCD
LED Indicator	1 power, 3 outputs
Material	Plastic housing
Mounting	DIN rail
Protection rating	IP20

WIND CONTROL UNIT

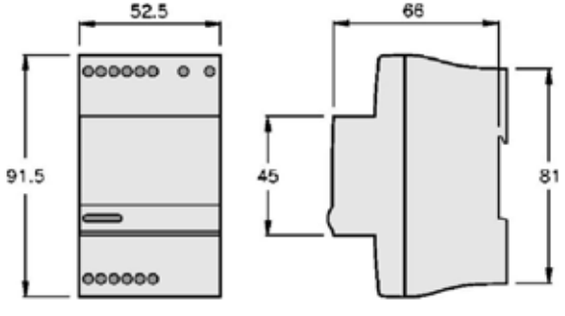



Wind Control System

Complementary Products

COMPLEMENTARY PRODUCTS
PIPE FITTING



Pipe fittings are the best way of connecting pipes through the wall or the floor of a fountain.

Available in standard sizes from 1“to 4”.

All models are extremely robust and resistant to oxidation because they are made entirely of AISI 316 stainless steel.

PIPE FITTING FL-FL

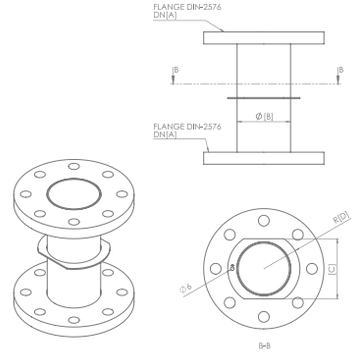

PIPE FITTING FL-F

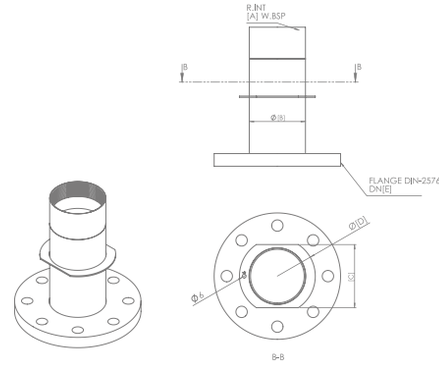

PIPE FITTING

Code		L [mm]	A	B [mm]	C	D	E
66630	PIPE FITTING FL-FL 3"	220	80	88,9	110	120	-
66631	PIPE FITTING FL-FL 4"	220	100	114,3	135	145	-
66632	PIPE FITTING FL-M 3"	220	3"	88,9	110	120	80
66633	PIPE FITTING FL-M 4"	220	4"	114,3	135	145	100
66634	PIPE FITTING FL-F 3"	220	3"	100	100	120	80
66635	PIPE FITTING FL-F 4"	220	4"	125	126	145	100

PIPE FITTING FL-M

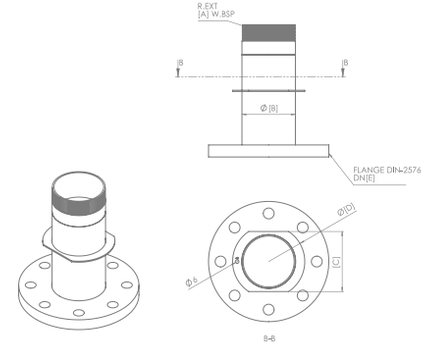

Pipe fittings are the best way of connecting pipes through the wall or the floor of a fountain.

Available in standard sizes from 1“ to 4”.

All models are extremely robust and resistant to oxidation because they are made entirely of AISI 316 stainless steel.

PIPE FITTING M-M

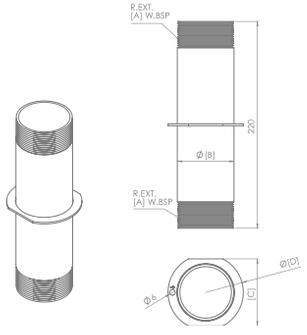

PIPE FITTING F-F

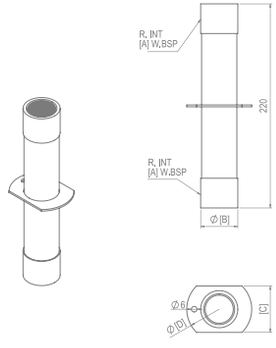

PIPE FITTING M-F

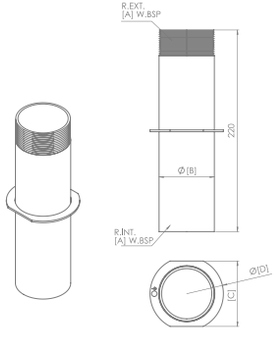

COMPLEMENTARY PRODUCTS
PIPE FITTING



PIPE FITTING

Code		L [mm]	A	B [mm]	C [mm]	D [mm]
66615	PIPE FITTING M-M 1"	220	1"	33,4	45	70
66616	PIPE FITTING M-M 1-1/2"	220	1 1/2"	48,3	60	75
66617	PIPE FITTING M-M 2"	220	2"	60,3	72	80
66618	PIPE FITTING M-M 3"	220	3"	88,9	100	120
66619	PIPE FITTING M-M 4"	220	4"	114,3	126	145
66620	PIPE FITTING F-F 1"	220	1"	40	50	70
66621	PIPE FITTING F-F 1-1/2"	220	1 1/2"	55	65	110
66622	PIPE FITTING F-F 2"	220	2"	70	85	120
66623	PIPE FITTING F-F 3"	220	3"	100	125	150
66624	PIPE FITTING F-F 4"	220	4"	125	145	160
66625	PIPE FITTING M-F 1"	220	1"	40	45	70
66626	PIPE FITTING M-F 1-1/2"	220	1 1/2"	55	80	110
66627	PIPE FITTING M-F 2"	220	2"	70	80	110
66628	PIPE FITTING M-F 3"	220	3"	100	100	120
66629	PIPE FITTING M-F 4"	220	4"	125	126	145

COMPLEMENTARY PRODUCTS

NEW PRODUCT

CABLE INLET FITTING 1 - 2" FEMALE THREAD



Cable inlet fitting 2" threaded for cable gland for wires of different diameter depending on the model. Made with AISI-316 stainless Steel and nickel pated brass. Works as a cable inlet fitting for 2" pipes.

CABLE INLET FITTING 1 - 2" FEMALE THREAD	72049	73350
Dimensions (L x W x A) [mm]	70 × 64 × 58	70 × 64 × 65
Cable diameter [mm]	5-14	11-20
Connection	2" G	2" G
Material	Stainless Steel 316 / Nickel plated brass	Stainless Steel 316 / Nickel plated brass

CABLE INLET FITTING 1 - 2" FEMALE THREAD

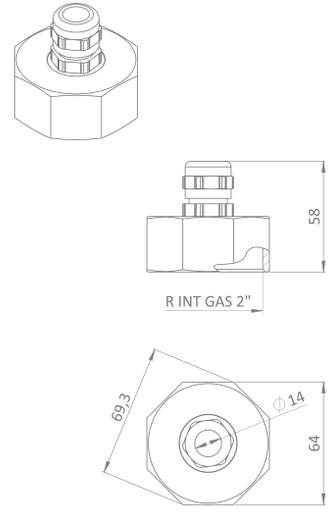

Prefilter LFS are mounted on the inlets of the suction lines to protect devices and water circuit from coarse debris.

Is highly versatile because it can be installed on the pipe directly and bolt it easily to the floor.

It has a large filter surface, so increases highly filter clogging time.

It is a very robust and resistant to rusting model manufactured entirely in AISI 316 stainless steel.

PREFILTER LFS Code: 73348	
Dimensions (L x W x H) [mm]	440× 440 × 370
Connection	DN150
Filter surface [m2]	1
Particle strainer [mm]	5
Material	AISI 316 stainless steel
Weight [kg	4,5 kg



PREFILTER LFS

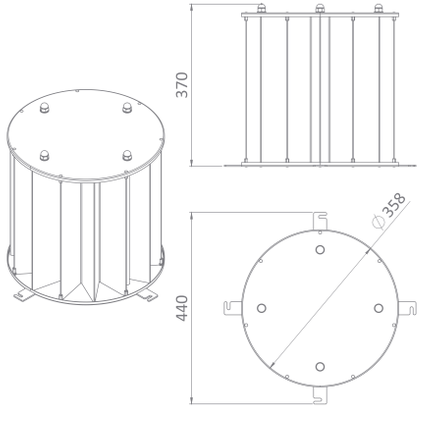

PRESSURE HOLDING VALVE

NEW PRODUCT

Pressure holding valve to install in manifolds with several controlled outputs. With this valve it is possible to maintain the pressure in the manifold, regardless of the open outputs.

With this valve is also possible to protect the pump against overload and the line of excessive pressures, in addition of ensuring a minimum flow.

It is a very robust and resistant to rusting model manufactured entirely in AISI 316 stainless steel.

PRESSURE HOLDING VALVE Code: 73349	
Dimensions (L x W x H) [mm]	385 × 170 x170
Connection	3”M
Maximum flow [l/min]	720
Maximum pressure [bar]	2.2
Material	AISI 316 Stainless steel

FLOOR DRAIN

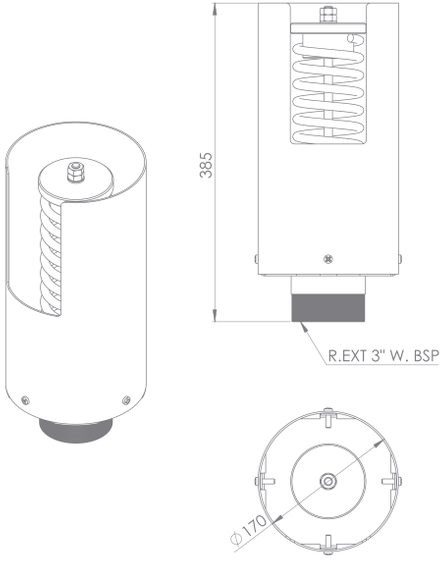



Pressure Holding Valve

Complementary Products

COMPLEMENTARY PRODUCTS

OVERFLOW



This overflow is suitable for any type of fountain. It is ideal for keeping the water level stable at all times and avoiding flooding.

It is available in two different models, depending on the surface of the fountain. Both models are made of AISI 316 stainless steel to ensure high protection against rust and weathering.

OVERFLOW	66612	66613
Dimensions (L x W x H) [mm]	200 × 150 × 96	250 × 179 × 104
Aspiration Flow 0,5 m/s [m^3/h]	4,5	10
Connection	2" G	3" G
Material	Stainless Steel 316	Stainless Steel 316

OVERFLOW 200 66612

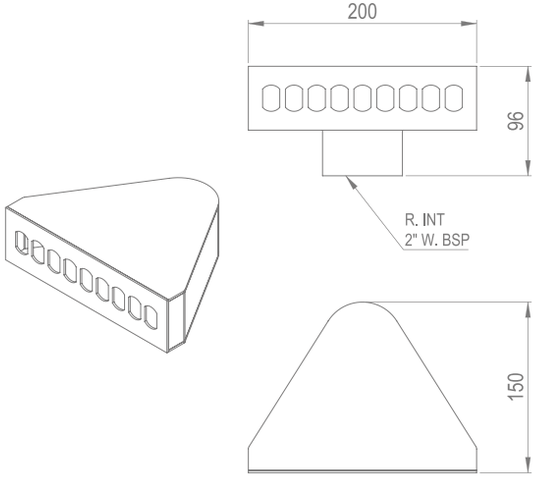

OVERFLOW 250 66613

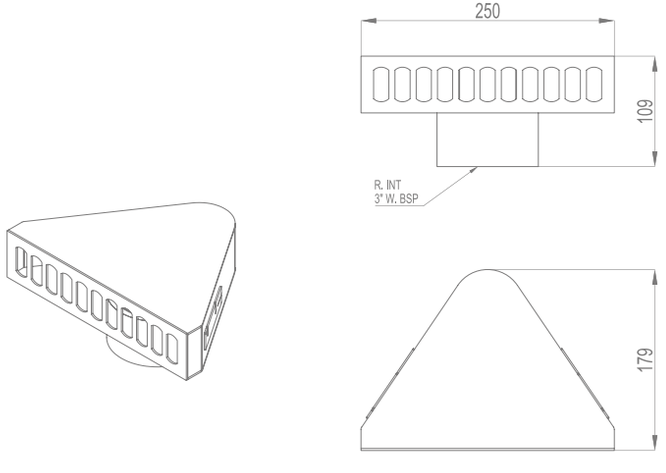

This overflow is suitable for any type of fountain. It is ideal for keeping the water level stable at all times and avoiding flooding.

It is available in two different models, depending on the surface of the fountain.

The standard model is manufactured between 10 and 100 centimeters, with the possibility of other dimensions on request.

Both models are made of AISI 316 stainless steel to ensure high protection against rust and weathering

COMPLEMENTARY PRODUCTS

OVERFLOW

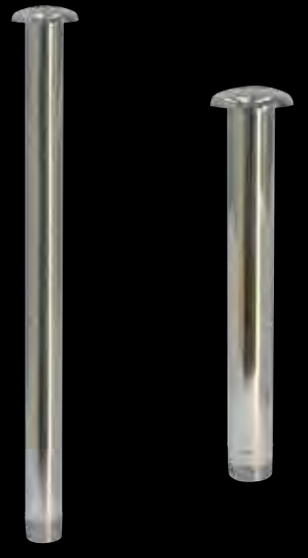

* Product Upon Request

OVERFLOW 2” 66610LXXXX

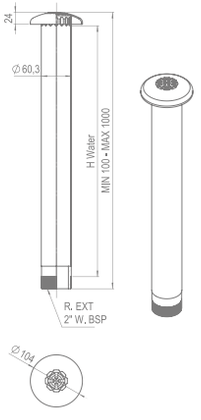

OVERFLOW 3” 66611LXXXX

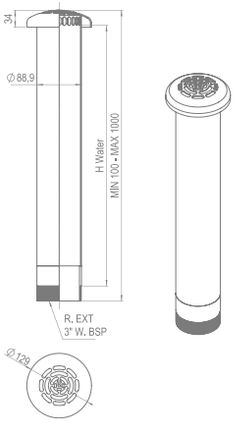

OVERFLOW	66610LXXXX	66611LXXXX
Dimensions (L x W x H) [mm]	105 × 105 × (100-1000)	130 × 130 × (100-1000)
Aspiration Flow 0,5 m/s [m3/h]	4,5	10
Connection	2" G	3" G
Material	Stainless Steel 316	Stainless Steel 316

OVERFLOW 3” 66611LXXXX

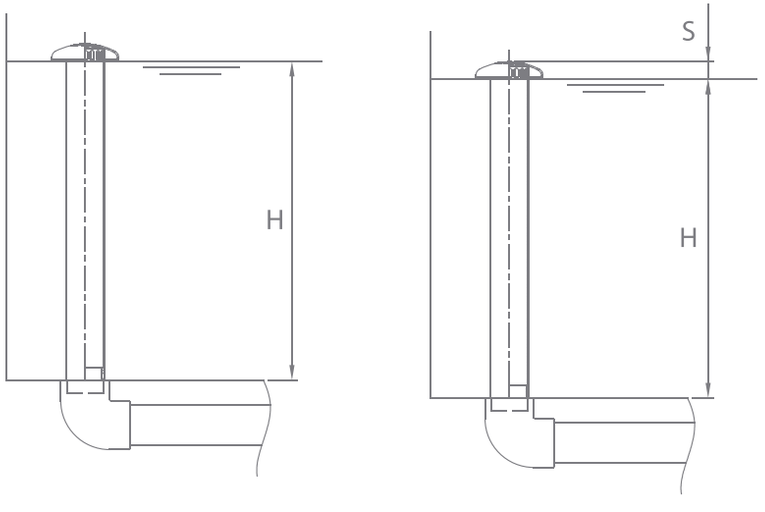

COMPLEMENTARY PRODUCTS

FLOOR DRAIN



This drain is installed on the floor of the pool of the fountain and it's ideal for ensuring fountain water emptying or return.

It is a very robust and resistant to oxidation model manufactured entirely in AISI 316 stainless steel.

FLOOR DRAIN Code: 66614	
Dimensions (L x W x H) [mm]	162 × 162 × 116
Aspiration flow 0,5 m/s [m^3/h]	4,5
Connection	2" G
Material	Stainless Steel 316

FLOOR DRAIN

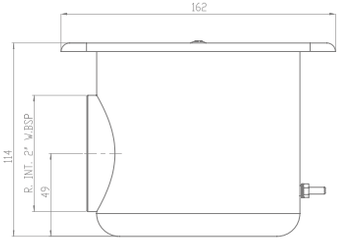

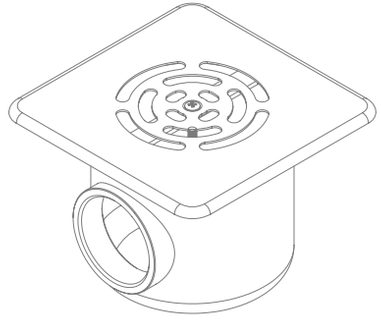

COMPLEMENTARY PRODUCTS
JUNCTION BOXES

ASTRALPOOL

The Junction Boxes are the best way to ensure watertight connections between cable inside the pool of the fountain. With its original design allow the connection of different devices with the same Junction Box.

It is a very robust and resistant to oxidation model manufactured entirely in AISI 316 stainless steel.

	66602	66603	66604	66605
Dimensions (L x W x H) [mm]	224×190×127	240×224×127	324×290×127	324×290×139
Number of inlets	6	10	16	32
Wire diameter	5-14	5-14	5-14	5-14
Material	Stainless steel 316			
Protection class	IP 68	IP 68	IP 68	IP 68



* Product Upon Request

JUNCTION BOX - 6 66602

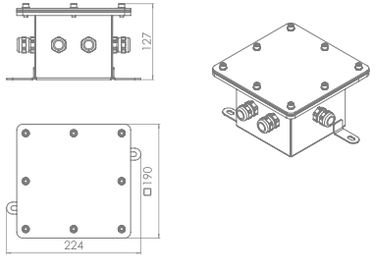

JUNCTION BOX - 10 66603

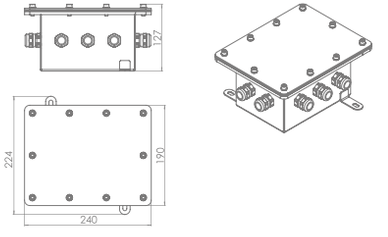

JUNCTION BOX - 16 66604

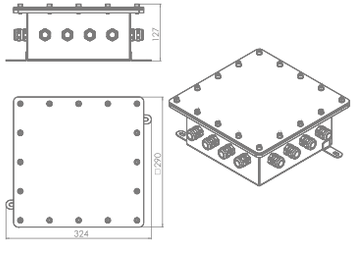

JUNCTION BOX - 32 66605

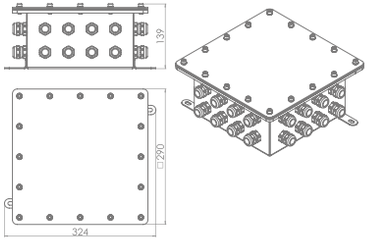

COMPLEMENTARY PRODUCTS

CABLE INLET FITTING



The Cable inlets Fittings are the best way to ensure watertight connections with cable through the walls of the fountain. With its original design allow the connection of different devices with the same Cable Inlet Fitting.

It is a very robust and resistant to oxidation model manufactured entirely in AISI 316 stainless steel.

	66598	66599	66600	66601
Dimensions (L x W x H) [mm]	70×48×151	80×70×151	175×175×181	215×215×181
Connection	1"G	2"G	3"G	4"G
Number of inlets	1	3	5	8
Wire diameter	5-14	5-14	5-14	5-14
Material	Stainless steel 316			
Protection class	IP 68	IP 68	IP 68	IP 68

CABLE INLET FITTING - 1 66598

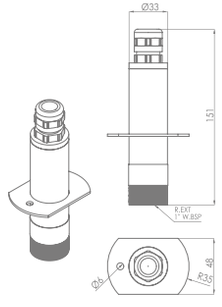

CABLE INLET FITTING - 3 66599

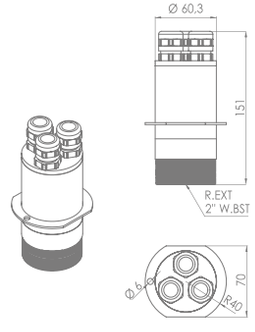

CABLE INLET FITTING - 5 66600

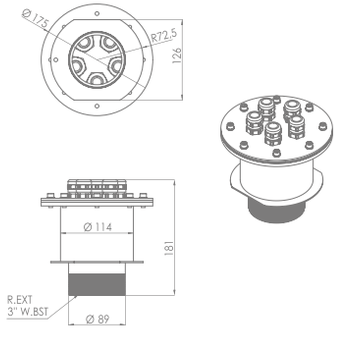

CABLE INLET FITTING - 8 66601

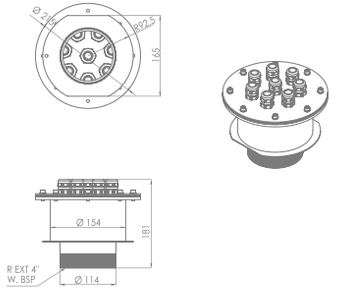

The Cable inlet Fitting Box are the best way to ensure watertight connections with cable through the walls of the fountain and at the same time interconnect different devices.

It is a very robust and resistant to oxidation model manufactured entirely in AISI 316 stainless steel.

	66606	66607	66608	66609
Dimensions (L x W x H) [mm]	290×290×253	290×290×265	290×290×270	290×290×282
Connection	3"G	3"G	4"G	4"G
Number of inlets	16	32	16	32
Wire diameter	5-14	5-14	5-14	5-14
Material	Stainless steel 316			
Protection class	IP 68	IP 68	IP 68	IP 68

CABLE INLET FITTING BOX 66606

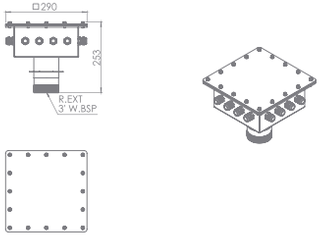

CABLE INLET FITTING BOX 66607

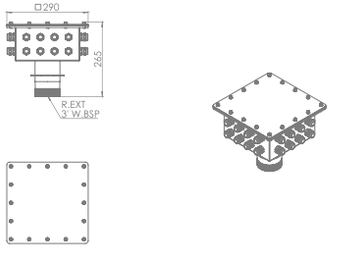

CABLE INLET FITTING BOX 66608

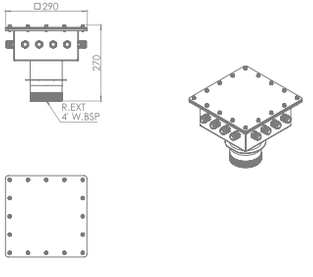

CABLE INLET FITTING BOX 66609

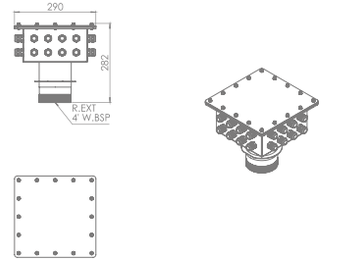

COMPLEMENTARY PRODUCTS

CABLE INLET FITTING BOX



ELECTRIC VALVES CPV

ELECTRIC VALVES

Sizes	¾", 1", 1½", 2", 3" BSP female
Options	24 VAC
Minimum flow	0,5 m3/h
Working pressure	0,7 - 10 bar
Material	Nylon reinforced
Control	Electric - solenoid 2 ways
Flow control	YES
Other characteristics	Without pipes or external accessories Compact construction Bolt closing cover Self cleaning hole

ELECTRIC VALVES 24VAC

CPV2071B - Electric valve 3/4"	56113
CPV2101B - Electric valve 1"	56114
CPV2151B - Electric valve 1"1/2	56115
CPV2201B - Electric valve 2"	56116
CPV1300B - Electric valve 3" (no flow control)	57641
CPV1301B - Electric valve 3"	60556

WORKING

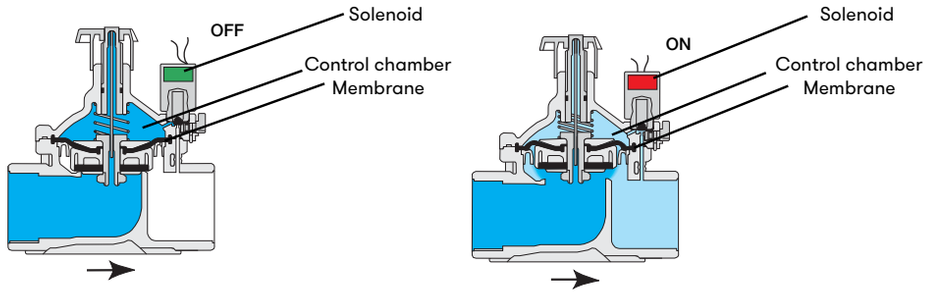

Closed Position
The internal restriction continuously allows line pressure into the control chamber. The solenoid controls outflow from the control chamber.
When the solenoid is closed it causes pressure to accumulate in the control chamber, therefor forcing the valve to close.

Open Position
Opening the Solenoid releases more flow from thecontrol chamber than the restriction can allow in. This causes the accumulated pressure in the control chamber to drop, enabling the line pressure acting on the plug to the valve.

COMPONENTS

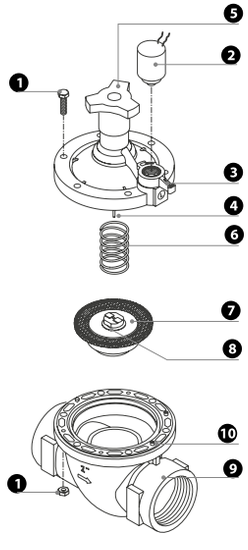

	COMPONENT	MATERIAL
1	Bolts and nuts	Stainless steel
2	Solenoid	
3	Manual override handle	
4	Needle	
5	Flow control	
6	Auxiliary closing spring	Acero inoxidable
7	Diaphragm	NBR
8	Internal restriction	
9	Body	Nylon reinforced



Electric Valves CPV

Complementary Products

ELECTRIC VALVES CPV

FLOW DIAGRAMM

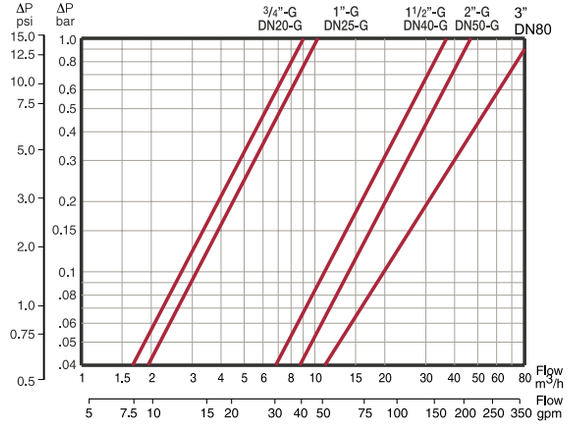

PRESSURE LOSS	¾”	1”	1½”	2”	3”
2	0,06	0,04			
3	0,125	0,09			
4	0,2	0,15			
5	0,3	0,25			
6	0,5	0,35			
7	0,7	0,5	0,04		
8	0,8	0,6	0,05		
9	1	0,7	0,07	0,04	
10		1	0,09	0,05	
15			0,175	0,1	0,06
20			0,3	0,2	0,1
30			0,7	0,4	0,2
40				0,7	0,3
50					0,4

PRESSURE LOSS	DN20 - ¾”	DN25 - 1”	DN40 - 1½”	DN50 - 2”	DN80 - 3”
Kv (m^3/h)	9	10,5	37	47	100

KV VALUE:

Flow V (water flow) in m3/h in a temperature between 5 to 30 °C, through a velve with a pressure loss of Δp = p1– p2=1 bar

DIMENSIONS	DN20	DN25	DN40	DN50
L (mm)	110	110	160	170
H (mm)	115	115	180	190
R (mm)	22	22	35	38
W (mm)	78	78	125	125
Weight (kg.)	0,35	0,33	1	1,1

DIMENSIONS DN80	L (mm)	H (mm)	h (mm)	W (mm)	Weight (kg.)
	298	180	50	190	1,6

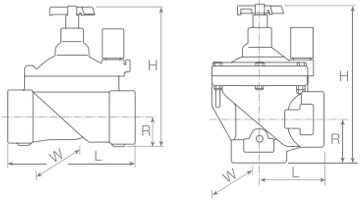

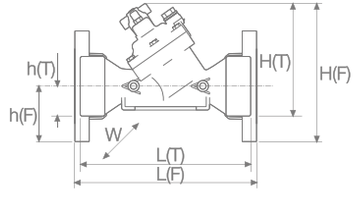

The Swivel is a perfect adapter for all types of nozzles. Corrects the unevenness produced during the development of the work. The Swivel also allows positioning any type of nozzle in any desired angle.

SWIVEL	66930	66929	73347
Dimensions (A x B) [mm]	70 × 68	93 × 89	49 × 85
Water connections (C)	1" G	1-1/2" G	1" G
Max working angle	+22° / -22°	+23° / -23°	+18° / -18°
Material	AISI 316	AISI 316	Nickel plated brass
Weight [kg]	0,6	1	0,4

SWIVEL Code: 66930 - 66929

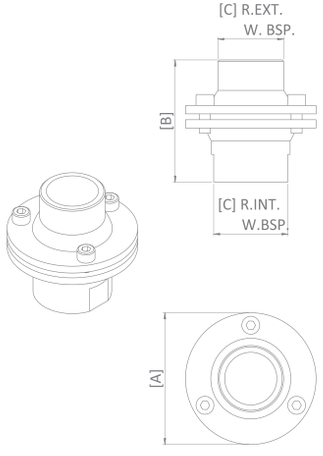

SWIVEL Code: 73347

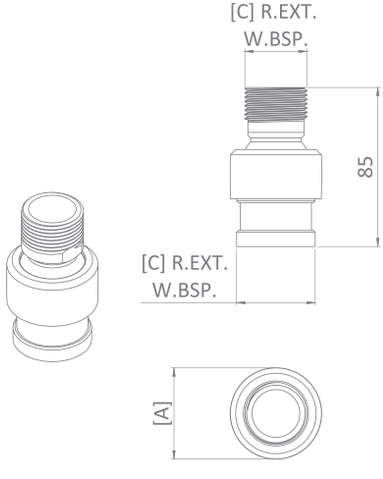

COMPLEMENTARY PRODUCTS

SWIVEL

NEW PRODUCT



PROJECT VIEW





COMPLEMENTARY PRODUCTS

LF FILTERS



	Connection	Maximum flow	Filtration surface (mesh)	Maximum temperature / pressure
CEPEX MANUAL LF FILTERS	¾"	5 m^3/h - 22 gpm	160 c^2 - 25 in2	8 bar/116 psi - 60 oC/140 oF
	1"	6 m^3/h - 26 gpm	160 cm^2 - 25 in2	8 bar/116 psi - 60 oC/140 oF
	1¼"	10 m^3/h - 44 gpm	265 cm^2 - 41 in2	8 bar/116 psi - 60 oC/140 oF
	1½"	14 m^3/h - 62 gpm	265 cm^2 - 41 in2	8 bar/116 psi - 60 oC/140 oF
	2"	25 m^3/h - 110 gpm	485 cm^2 - 75 in2	8 bar/116 psi - 60 oC/140 oF

PRESSURE LOSS

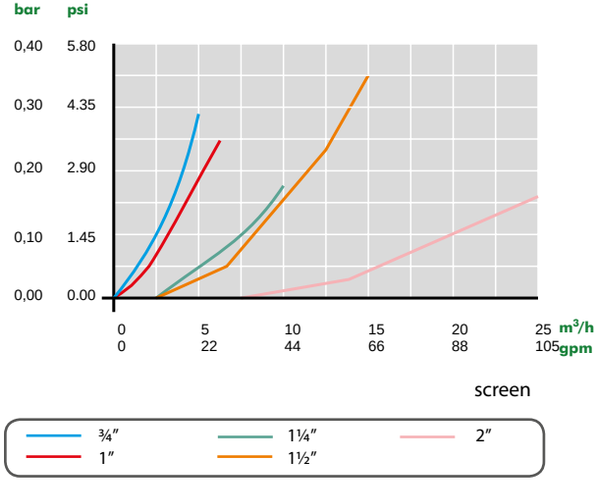

DIMENSIONS	H		W		X		D	
	mm	in	mm	in	mm	in	mm	in
3/4"	173	7	185	7	158	6	83	3
1"	173	7	190	7	168	7	133	5
1"1/4	202	8	231	9	231	9	133	5
1"1/2	202	8	231	9	231	9	115	5
2"	248	10	270	11	267	11	144	6

LF FILTERS

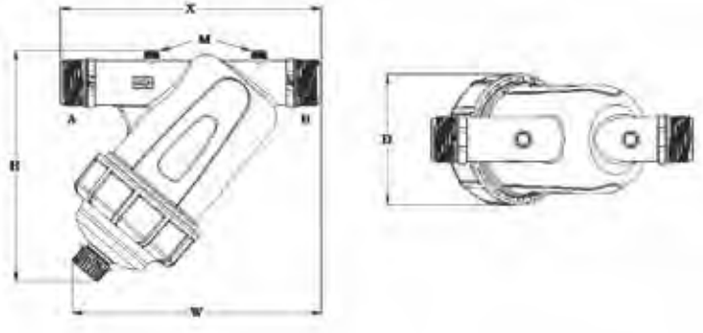

MESH LF FILTERS	CODE
CEPEX MANUAL LF FILTER 3/4"B SCREEN 130MICRON - Q 5M3/H	34910
CEPEX MANUAL LF FILTER 1"B SCREEN 130 MICRON - Q 6M3/H	34911
CEPEX MANUAL LF FILTER 1 1/4"B SCREEN 130M - Q 10M3/H	04132
CEPEX MANUAL LF FILTER 1 1/2"B SCREEN 130M - Q 14M3/H	04133
CEPEX MANUAL LF FILTER 2"B SCREEN 130 MICRON - Q 25M3/H	34912

	Connection	Maximum flow	Filtration surface (mesh)	Maximum temperature / pressure
CEPEX MANUAL HFL FILTERS	2”	30 m3/h - 132 gpm	650 cm2 - 101 in2	6 bar/90 psi - 60 oC/140 oF
	2” LARGE	30 m3/h - 132 gpm	960 cm2 - 149 in2	6 bar/90 psi - 60 oC/140 oF
	3”	50 m3/h - 220 gpm	650 cm2 - 101 in2	6 bar/90 psi - 60 oC/140 oF
	3” LARGE	50 m3/h - 220 gpm	960 cm2 - 149 in2	6 bar/90 psi - 60 oC/140 oF

Standard: 130 microns - 8 bar
Ask for other options

PRESSURE LOSS

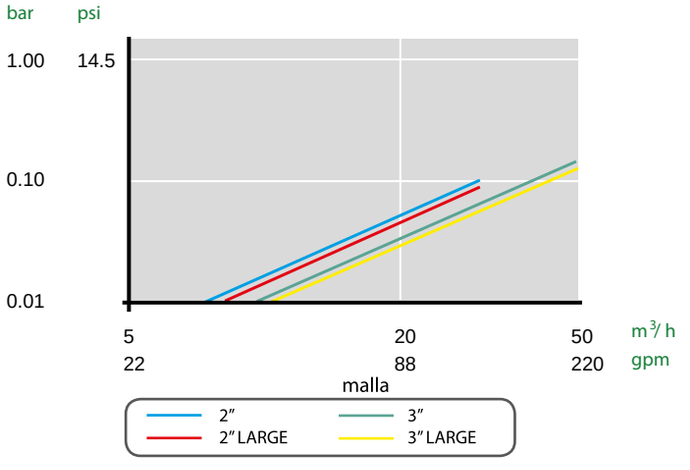

MESH HFL FILTERS	CODE
CEPEX MANUAL HLF FILTER 2 B SCREEN 130 MICRON 30 M3/H	62271
CEPEX MANUAL HLF FILTER 2LARGE B SCREEN 130M 30M3/H	62273
CEPEX MANUAL HLF FILTER 3 B SCREEN 130 MICRON 50M3/H	62275
CEPEX MANUAL HLF FILTER 3LARGE B SCREEN 130 MICRON 50M3/H	62277

COMPLEMENTARY PRODUCTS
HFL FILTERS



DIMENSIONS	H		W		X		D	
	mm	in	mm	in	mm	in	mm	in
2”	445	17.5	286	11.2	75	3.0	231	9.1
2” LARGE	595	23.4	286	11.2	75	3.0	231	9.1
3”	495	19.5	336	13.2	110	4.3	231	9.1
3” LARGE	645	25.4	336	13.2	110	4.3	231	9.1

HFL FILTERS

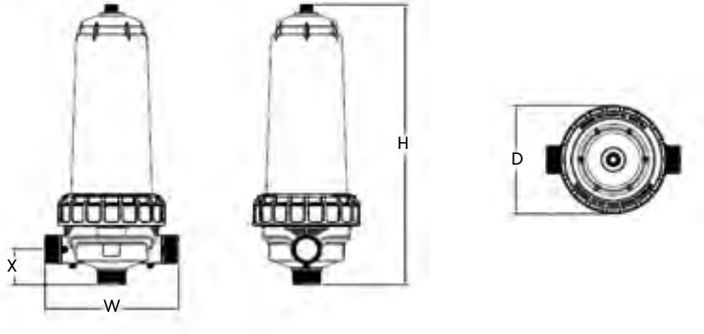

VICTORIA PLUS SILENT PUMP

A self-priming pump with single-phase and three-phase motors of 1/2 to 3 HP. A prefilter is mounted on the body of the pump to prevent foreign bodies from entering it that may damage its hydraulic parts. The motors supplied come with an IP-55 protection rating and have been prepared to withstand hot environments and high levels of humidity. The main characteristics of Victoria Plus Silent are:

- Low noise level: between 61 dBA–70 dBA.
- Easy to use: Prefilter cap with 2 levers included (no spanner needed).
- Compatibility: Fully compatible in pools fitted with a Victoria Plus pump. Larger front bearing for improved axial thrust.

Optional:
60 Hz pumps (code XXXX-0810).

	Code	Standard Pack	Standard Weight kg	Standard Volume m³
10.000 l/h 0,43 kW (1/2 HP) 230 V II	65557	1	12	0.07
10.000 l/h 0,43 kW (1/2 HP) 230/400 V III	65558	1	12	0.07
11.000 l/h 0,61 kW (3/4 HP) 230 V II	65560	1	13	0.07
11.000 l/h 0,60 kW (3/4 HP) 230/400 V III	65561	1	13	0.07
16.000 l/h 0,78 kW (1 HP) 230 V II	65562	1	14	0.07
16.000 l/h 0,76 kW (1 HP) 230/400 V III	65563	1	14	0.07
21.500 l/h 1,10 kW (1,5 HP) 230 V II *	65564	1	14	0.07
21.500 l/h 1,10 kW (1,5 HP) 230/400 V III *	65565	1	14	0.07
26.000 l/h 1,46 kW (2 HP) 230 V II *	65566	1	17	0.07
26.000 l/h 1,46 kW (2 HP) 230/400 V III *	65567	1	17	0.07
34.000 l/h 2,20 kW (3 HP) 230/400 V II *	65569	1	18	0.07
34.000 l/h 2,20 kW (3 HP) 230/400 V III *	65570	1	18	0.07
*Set of PVC accessories (not included with the pump)	67655	1	-	-

VICTORIA PLUS SILENT PUMP PERFORMANCE CURVE

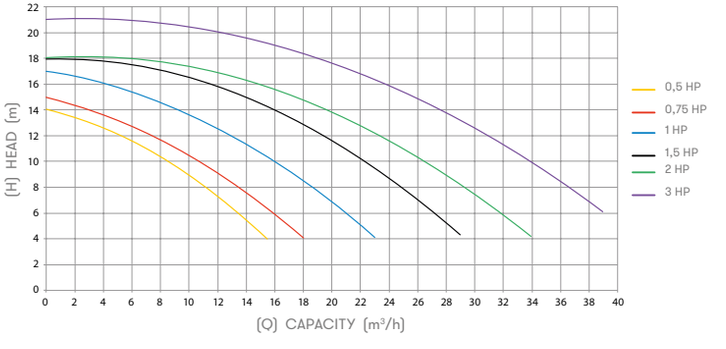

VICTORIA PLUS SILENT PUMP



Code	Dimensions								
	A	B	C	D	D1	E	F	H	I
65557	581	281	246	External Thread on the Victoria Plus Silent	2" GAS	359	322	164	254
65558	581	281	246		2" GAS	359	322	164	254
65560	581	281	246		2" GAS	359	322	164	254
65561	581	281	246		2" GAS	359	322	164	254
65562	581	281	246		2" GAS	359	322	164	254
65563	581	281	246		2" GAS	359	322	164	254
65564	615	281	246		2" GAS	359	356	164	254
65565	615	281	246		2" GAS	359	356	164	254
65566	615	281	246		2" GAS	359	356	164	254
65567	615	281	246		2" GAS	359	356	164	254
65569	646	281	246		2" GAS	359	387	164	254
65570	615	281	246		2" GAS	359	356	164	254

Code	Power CV/HP	Voltage V	Max. H m	RPM	Nom. Q m³/h	Nom. H m	Weight kg	Volume m³
65557	1/2 CV II	230V	14	2810	11	8	12	0.07
65558	1/2 CV III	230/400V	14	2825	11	8		
65560	3/4 CV II	230V	15	2802	11	10	13	
65561	3/4 CV III	230/400V	15	2810	11	10		
65562	1 CV II	230V	17	2810	16	10	14	
65563	1 CV III	230/400V	17	2810	16	10		
65564	1.5 CV II	230V	18	2800	22,5	10		
65565	1.5 CV III	230/400V	18	2810	22,5	10		
65566	2 CV II	230V	18	2860	26,5	10	17	
65567	2 CV III	230/400V	18	2800	26,5	10		
65569	3 CV II	230V	21	2827	34	10	18	
65570	3 CV III	230/400V	21	2780	34	10		



Victoria Plus Silent Pump

Pumps

KIVU PUMP

High performance plastic self-priming pump for high flow rates (1500 rpm).
- 3 power modes: 3 HP, 4 HP and 5.5 HP.
- Low sound level: as low as 59 dBA
- Hydraulic efficiency without prefilter 78% (as per ISO 9906 standard).
- High quality mechanical seal for salt water.
- IEC high efficiency motors (IE3).
- Standard motor shaft (compatibility with any pump manufacturer).
- Product with GS marking
- Pump comes with pre-filter (in 2 packages: pump + prefilter).

	Code	Standard Pack	Standard Weight kg	Standard Volume m³
Kivu 2,20 kW (3 HP) 230/400V 50Hz + prefilter	66047	1	56.4	0.35
Kivu 2,20 kW (3 HP) 400/690V 50Hz + prefilter	63042	1	56.4	0.35
Kivu 3,00 kW (4 HP) 230/400V 50Hz + prefilter	66048	1	59.4	0.35
Kivu 3,00 kW (4 HP) 400/690V 50Hz + prefilter	63043	1	59.4	0.35
Kivu 4,10 kW (5.5 HP) 230/400V 50Hz + prefilter	66049	1	66.4	0.35
Kivu 4,10 kW (5.5 HP) 400/690V 50Hz + prefilter	63044	1	66.4	0.35

Code	Power	A	Da	Di	DNa	DNi	C	C1	E	F	G	H	I	J	K	L	M	N	O	P	Q	R	Ma	Mi
	HP	mm																						
63042 66047	3	440	-	220	-	100 - 4"	462	610	279	206	480	313	320	561	29.5	882	157	181.5	100	460	154	590	-	180
63043 66048	4	440	-	220	-	100 - 4"	462	610	279	206	480	313	320	561	29.5	882	157	181.5	100	460	154	590	-	180
63044 66049	5.5	440	-	220	-	100 - 4"	462	610	279	206	480	313	345	561	156	906	157	181.5	100	460	154	621	-	180

Flanges drilled to standard DIN-2501. Quick closing lid. Polypropylene basket. Drain plug. Maximum working pressure 1.5 bar.

	Code	Standard Pack	Standard Weight kg	Standard Volume m³
25 l Capacity 6" Connections DN 150	56733	1	9.9	0.08

Optional:
60 Hz pumps (code XXXX-0810).

KIVU PUMP

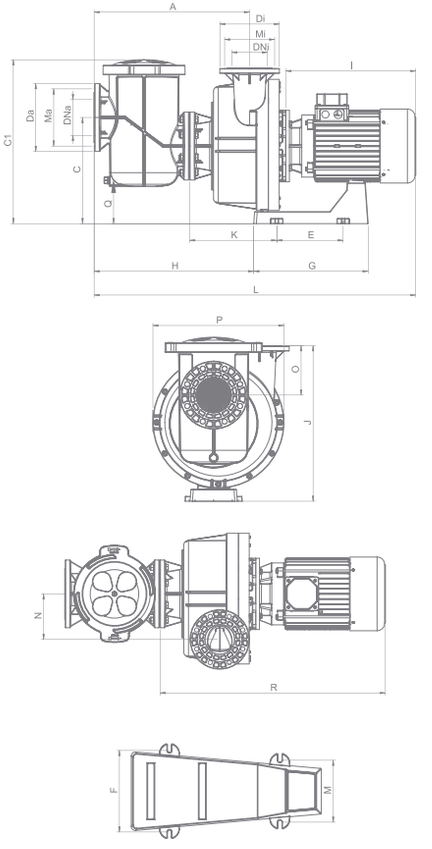

KIVU STRAINERS

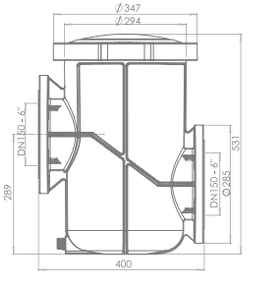



GRAPH SHOWING PERFORMANCE OF PUMPS WITHOUT PREFILTER

Pressure/Flow rate

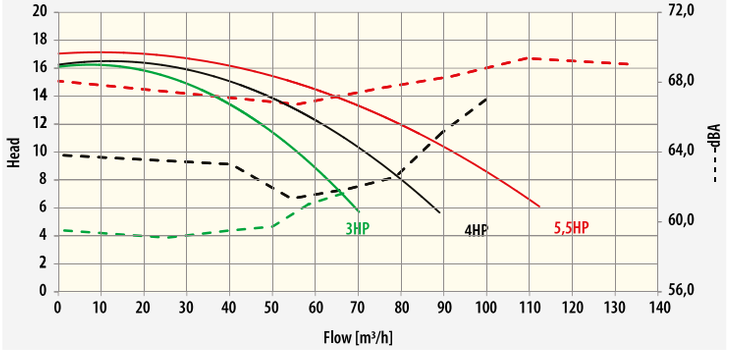

GRAPH SHOWING PERFORMANCE OF PUMPS WITHOUT PREFILTER

Power/Flow rate

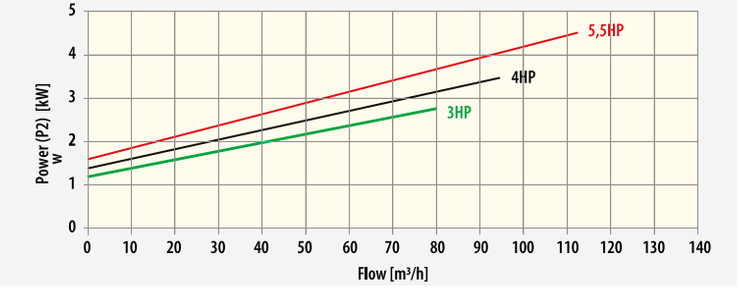

KIVU PUMP

High performance plastic centrifugal pump for public pools that works at 1500 rpm.
- 3 power modes: 7.5 HP, 10 HP and 15 HP.
- Low sound level: as low as 66 dBA
- Hydraulic efficiency without prefilter 85% (9906 ISO standard).
- High quality mechanical seal for salt water.
- IEC high efficiency motors (IE3).
- Standard motor shaft (compatibility with any pump manufacturer).
- Product with GS marking
- Pump comes with pre-filter (in 2 packages: pump + prefilter).

	Code	Standard Pack	Standard Weight kg	Standard Volume m³
Kivu 5,60 kW (7.5 HP) 230/400 V 50Hz + prefilter	56633	1	107.4	0.43
Kivu 5,60 kW (7.5 HP) 400/690 V 50Hz + prefilter	56634	1	107.4	0.43
Kivu 7,50 kW (10 HP) 230/400 V 50Hz + prefilter	56635	1	117.9	0.45
Kivu 7,50 kW (10 HP) 400/690 V 50Hz + prefilter	56637	1	117.9	0.45
Kivu 11,20 kW (15 HP) 230/400 V 50Hz + prefilter	56638	1	151.2	0.49
Kivu 11,20 kW (15 HP) 400/690 V 50Hz + prefilter	56639	1	151.2	0.49

Code	Power	A	Da	Di	DNa	DNi	C	C1	E	F	G	H	I	J	K	L	M	N	O	P	Q	R	Ma	Mi
	HP	mm																						
56633 56634	7.5	653	285	250	150 - 6"	125 - 5"	446	688	279	206	290	540	410	653	141	1215	157	192	208	550	157	815	240	210
56635 56637	10	653	285	250	150 - 6"	125 - 5"	446	688	279	206	290	540	445	653	141	1250	157	192	208	550	157	850	240	210
56638 56639	15	653	285	250	150 - 6"	125 - 5"	446	688	279	206	290	670	510	653	271	1315	157	192	208	550	157	915	240	210

Flanges drilled to standard DIN-2501. Quick closing lid. Polypropylene basket. Drain plug. Maximum working pressure 1.5 bar.

	Code	Standard Pack	Standard Weight kg	Standard Volume m³
25 l Capacity 6" Connections DN 150	56733	1	9.9	0.08

Optional:
60 Hz pumps (code XXXX-0810).

KIVU PUMP

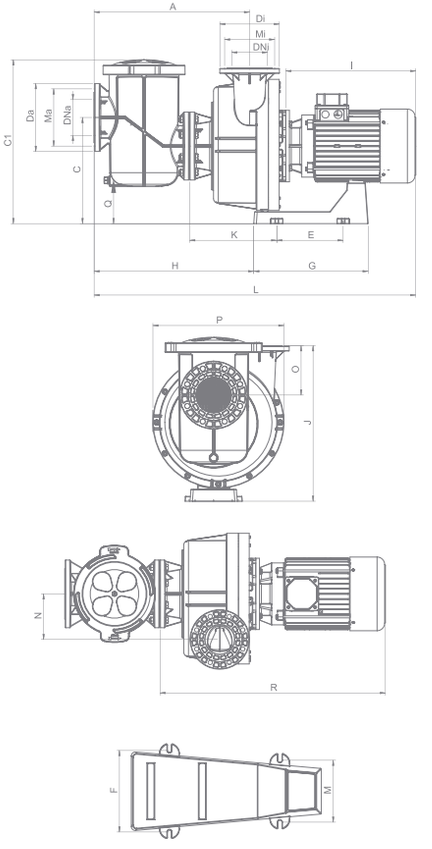

KIVU STRAINERS

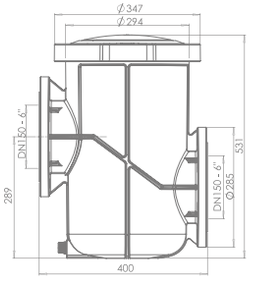







Kivu strainers

AstralPool Toolbox app
for IOS and Android

Kivu Pump

Self-Priming Pumps

GRAPH SHOWING PERFORMANCE OF PUMPS WITHOUT PREFILTER

Pressure/Flow rate

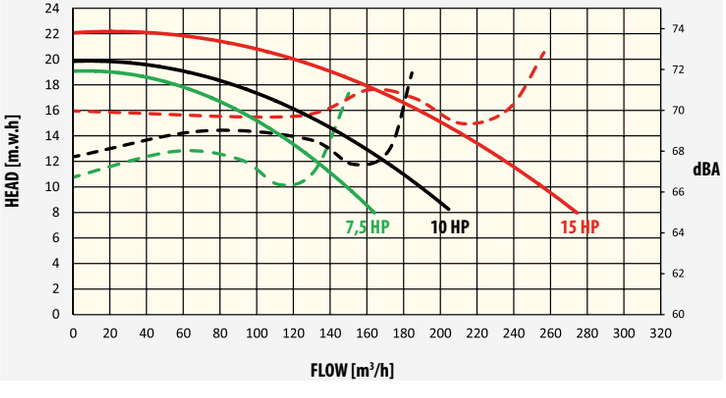

GRAPH SHOWING PERFORMANCE OF PUMPS WITHOUT PREFILTER

Power/Flow rate

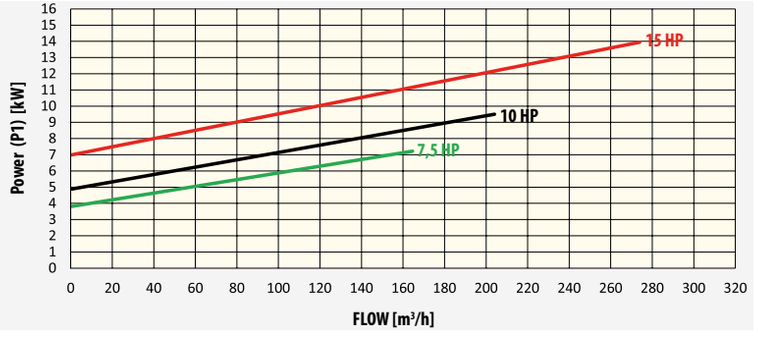

SUBMERSIBLE PUMP DF WITH PREFILTER

NEW PRODUCT

Submersible DF pumps has a prefilter incorporated which helps to the correct working of the device. It has a large filter surface, so increases highly filter clogging time.

Incorporates supports to ease horizontal pump installation.

There are available some pump models according to the needs of each installation.

It is a very robust and resistant to rusting model manufactured in AISI 304 stainless steel.

		70173	70175	70177	70179	70180	70181	70184	70190
Dimensions	Lenght (L)	402	417	447	447	402	417	447	447
	Width (W)	232	232	232	232	232	232	232	232
	Height (H)	234	234	234	234	234	234	234	234
Voltaje Nominal [V]		230	230	230	230	400	400	400	400
Potencia nominal [kW]		0,55	0,75	1,1	1,5	0,55	0,75	1,1	1,5
Maximum Flow [l/min]		250	325	375	420	250	325	375	420
Maximum head [m]		10,9	14	16,1	20,6	10,9	14	16,1	20,6
Hydraulic connection		1 1/2" G	1 1/2" G	1 1/2" G	1 1/2" G	1 1/2" G	1 1/2" G	1 1/2" G	1 1/2" G
Minimum water depth [mm]		300	300	300	300	300	300	300	300

SUBMERSIBLE PUMP DF WITH PREFILTER

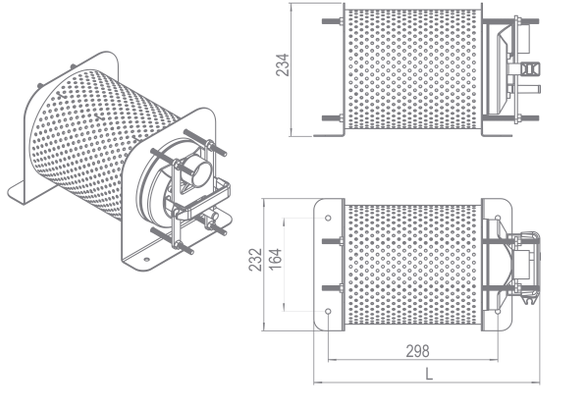



Submersible Pump Df With Prefilter

Self-Priming Pumps

GRAPH SHOWING PERFORMANCE OF PUMPS

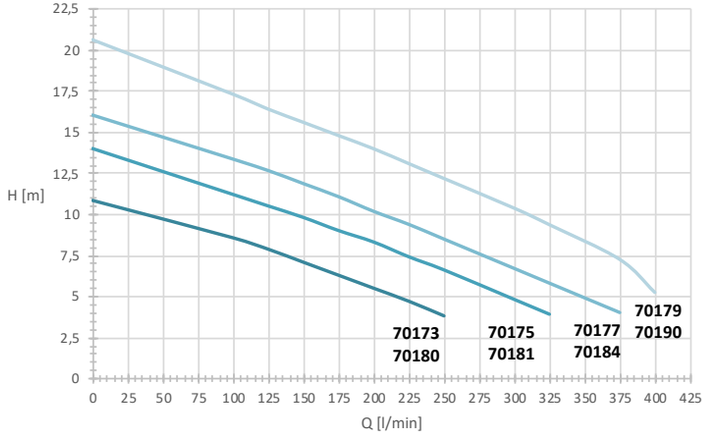

STRAINERS

ARALS STRAINERS



Housing and cover in cast iron. AISI-304 stainless steel strainer basket. Flange connection are manufactured in accordance with DIN-2501 Standard. Maximum working pressure 2.5 bar.

ARALS STRAINERS 11 l	Code	Standard Pack	Standard Weight kg	Standard Volume m^3
Flanges DN 65 (21/2") DN 65 (21/2")	20026	1	35	0.051
Flanges DN 100 (4") DN 100 (4")	20029	1	35	0.051
Flanges DN 125 (5") DN 125 (5")	20030	1	35	0.051
Flanges DN100 (4") DN 80 (3")	20032	1	35	0.051
Flanges DN 125 (5") DN 100 (4")	20033	1	35	0.051

ARALS STRAINERS 37 l	Code	Standard Pack	Standard Weight kg	Standard Volume m^3
Flanges DN 150 (6") DN 150 (6")	01268	1	129	0.319

ARALS STRAINERS 11 l

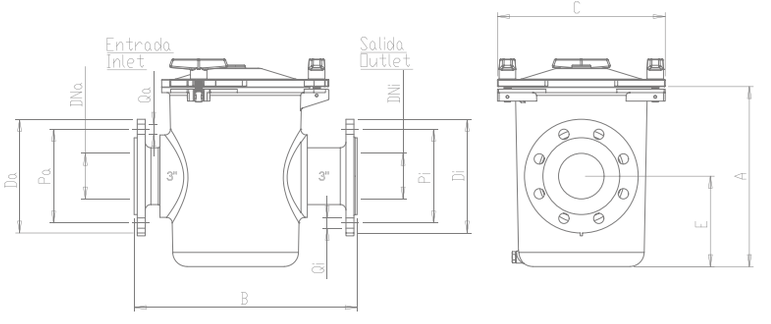

ARALS STRAINERS 37 l

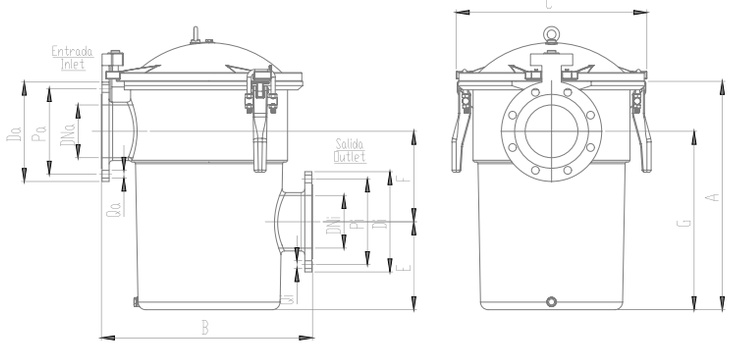

Code	Capacity	Input connection					Outlet connection					Dimensions (mm)					
		Da (mm)	DNa	Pa (mm)	Qa		Di (mm)	DNi	Pi (mm)	Qi							
Aral	l				No	Ø (mm)				No	Ø (mm)	A	B	C	E	F	G
20026	11	185	65-2$^1/_2$"	145	4	18	185	65-2$^1/_2$"	145	4	18	315	392	295	159	–	–
20029	11	220	100-4"	180	8	18	220	100-4"	180	8	18	315	392	295	159	–	–
20030	11	250	125-5"	210	8	18	250	125-5"	210	8	18	315	392	295	159	–	–
20032	11	220	100-4"	180	8	18	200	80-3"	160	8	18	315	392	295	159	–	–
20033	11	250	125-5"	210	8	18	220	100-4"	180	8	18	315	392	295	159	–	–
01268	37	285	150-6"	240	8	22	285	150-6"	240	8	22	649	600	542	250	257	507

Laminated filter made of fibreglass and polyester. Grey in colour, polypropylene base, new boltless lid, water drainage plug, flowmeter and side-mounted multiport valve. Maximum pressure of 2.5 kg/cm^2. Top filtration speed of 50 m^3/h/m^2.

WITH SIDE-MOUNTED MULTIPORT VALVE	Code	Standard Pack	Standard Weight kg	Standard Volume m^3
With side-mounted multiport valve				
5000 l/h Ø 350 mm outlet 11/2"	00497	1	18	0.13
8000 l/h Ø 450 mm outlet 11/2"	00498	1	21	0.23
9000 l/h Ø 500 mm outlet 11/2"	19781	1	23	0.28
14000 l/h Ø 600 mm outlet 11/2"	00499	1	28	0.39
15000 l/h Ø 650 mm outlet 11/2"	21071	1	29	0.45
21000 l/h Ø 750 mm outlet 2"	00500	1	37	0.62

WITH MULTIPORT VALVE	00497	00498	19781	00499	21071	00500
Ø D (mm)	350	450	500	600	650	750
H (mm)	780	795	770	850	880	945
M (mm)	420	430	415	455	480	555
N (mm)	295	305	290	330	355	325
Connections	11/2"	11/2"	11/2"	11/2"	11/2"	2"
Flow (m^3/h) at 50 m^3/h/m^2	5	8	9	14	15	21
Pool volumen (m^3) (8 h)	40	64	72	112	120	168
Sand load (kg)	50	70	90	125	200	290
Grade 1 glass load (57011) (kg)	35	49	63	88	140	203
Grade 2 glass load (57012) (kg)	9	13	17	24	38	258
Maximum pressure (kg/cm^2)	2.5	2.5	2.5	2.5	2.5	2.5
Net weight (kg)	18	21	23	28	29	37
Package volume (m^3)	0.13	0.23	0.28	0.39	0.45	0.62

ASTER FILTERS

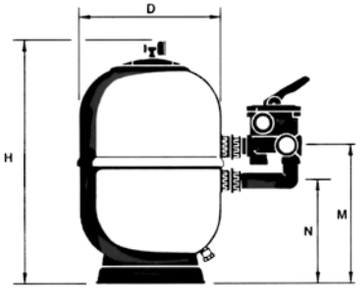

LAMINATED FILTERS
ASTER FILTERS

ASTRALPOOL



DRAIN GRILLE

DRAIN GRILLE IN STAINLESS STEEL



Designed for fountains. Support frame and grille in polished stainless steel. Supplied with fixing screws. Other sizes can be made to order.

AISI-316		Code	Standard Pack	Standard Weight kg	Standard Volume m^3
Size (mm)	Max. recommended flow rate				
200×200	15 m^3/h (0,5 m/s)	30764	1	1.2	0.01
300×300	43 m^3/h (0.5 m/s)	30765	1	2.2	0.01
400×400	83 m^3/h (0,5 m/s)	30766	1	4.0	0.03
500×500	136 m^3/h (0,5 m/s)	30767	1	4.5	0.04

STAINLESS STEEL INLETS

BRETURN INLET



Outer 11/2" thread. Made of AISI-316 stainless steel. Max. recommended flow rate compliant with standard EN 13451-3: 4.5 m^3/h. Ø 20 mm eyeball.

	Code	Standard Pack	Standard Weight kg	Standard Volume m^3
Length 35 mm	32994	1	0.3	0.001
Length 50 mm	16325	1	0.3	0.001
Length 70 mm	16326	1	0.5	0.001

This robust waterproof junction allows to make IP68 connections, both for electrical and communication cables.

It is available in two different models, depending on the cable diameter to be connected.

Both models are made of AISI 316 stainless steel to ensure high protection against rust and weathering.

WATERPROOF JUNCTION	70685	70684
Dimensions (L x W x H) [mm]	171 × 76 × 76	171 × 76 × 76
Cable diameter range [mm]	14 - 5	20 - 11
Material	SS 316 / Brass / TPE	SS 316 / Brass / TPE

WATERPROOF JUNCTION Code: 70685

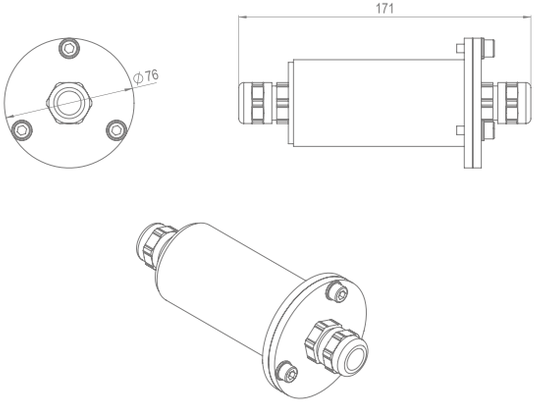

WATERPROOF JUNCTION Code: 70684

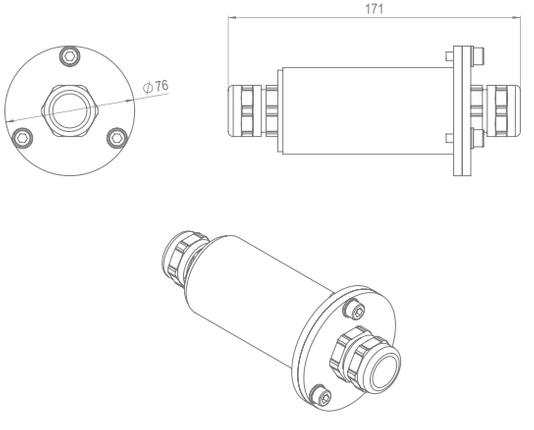

COMPLEMENTARY PRODUCTS

WATERPROOF JUNCTION



DOSING PUMPS

OPTIMA NEXT

CONSTANT FLOW RATE ANALOGUE DOSING PUMP



The OPTIMA dosing pump represents the development of more than 30 years of experience in the automatic dosing field. This new series reduces the number of pumps required to meet the various dosing needs.

The OPTIMA dosing pump series, with its new power supply technology from 90, VCA to 265 VCA and at 50-60 Hz, ensures a precision and reliability never seen before.

Integration of many functions due to its simple programming, an alphanumeric display, the possiblity of multilingual programming of the menu and a new technology which permit controlled flow rate and back pressure. Allows to use the same model for various applications providing a great versatility.

Systems produced according to EC standards. IP-65 protection rating. Electrical power supply of 90-265 VCA 50/60 Hz. Materials in contact with the chemical product are made of polypropylene, Viton, Teflon and PVC (other materials possible upon request). Anti-acid plastic bodywork. Moisture-resistant membrane buttons. Built-in bleed valve. No lubrication necessary and little maintenance.

The flow rate is fully adjustable from the flow meter. Power supply from 90 to 230 VCA at 50-60 Hz without plug.

	Code	Standard Pack	Standard Weight kg	Standard Volume m^3
Adjustable Optima manual pump at 8 bar and 5 l/h	66164	1	-	-

The panels in the CONTROLLER range are fully equipped and assembled systems. They are therefore ideal for use in water treatment.

Their simple, compact design makes installation and start-up extremely easy.

They come with all of the components and accessories required for rapid assembly. All assemblies are made of PVC sheets, in various sizes depending on the model.

General technical features

- Range of available sizes depending of the probe selected.
- Range available for free chlorine: 0-2, 0-5 0-10, 0-20 and 0-200 ppm.
- pH range: 0–14.
- ORP range: +/-1500 mV.
- Temperature range: 0–50oC.
- Measurement of stable chlorine with low pH dependence.
- Self-calibration of all sizes.
- Alarm signal if water flow is insufficient.
- Instrument with IP65 protection rating.
- 250 V-10 A relays for connecting dosing pumps or salt chlorinators.
- 4-20 mA analogue outlets with repeat signal or manifold for proportional pumps.
- Power supply: 230 V / 50 Hz.
- Setpoints and programmable alarms.
- Pump pause function during calibration and for stopping flow.
- Temperature readings and readjustment (automatic with PT100 probe included).
- Three types of setpoint settings. On/Off, Proportional in Time and Proportional by Pulses.
- RS485 communications port.

Components included in the assembly:

- Methacrylate probe holder, with flow regulator, sample taking valve and flow sensor.
- Filter holder and 80 micron filter cartridge for water inlet.
- DPD calibration standard solutions.
- Assembly accessories, and instruction and installation manual.
- Sensors depending on version.

	Code	Standard Pack	Standard Weight kg	Standard Volume m^3
Controller pH / Redox	66178	1	-	-

AUTOMATIC REGULATION AND CONTROL EQUIPMENT

CONTROLLER

ASTRALPOOL



COMPATIBLE NN thing

Fluidra Connect compatible

DOSING EQUIPMENT

3.5 KG DOSSI-3

CHLORINE AND BROMINE FEEDER



Chlorine and bromine feeder. Manufactured from unalterable plastic materials (ABS). Approximate capacity: 3.5 kg of tablets. Lid closing with double safety system. Easy to operate regulation valves. For pools up to 60 m^3 with chlorine and up to 30 m^3 with bromine. Height: 405 mm.

	Code	Standard Pack	Standard Weight kg	Standard Volume m^3
Dosi-3 in-line for pools up to 60 m^3. For direct connection to pipework with 1 1/2" connectors	24429	1	1.81	0.03
Dossi-3 off-line for pools up to 60m^3. For by-pass connection with flexible tube	24430	1	1.90	0.031

3.5 KG DOSSI-3 CHLORINE AND BROMINE FEEDER Code: 24429

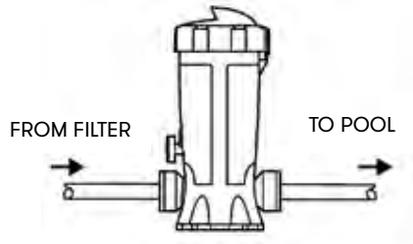

3.5 KG DOSSI-3 CHLORINE AND BROMINE FEEDER Code: 24430

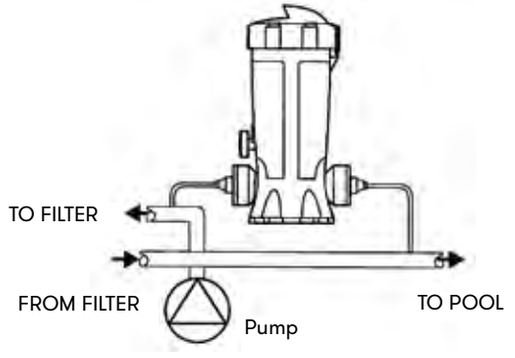

INSTALLATION DIAGRAM OF CHLORINE/BROMINE DOSING UNITS AND AUTOMATIC REGULATING AND CONTROL EQUIPMENT

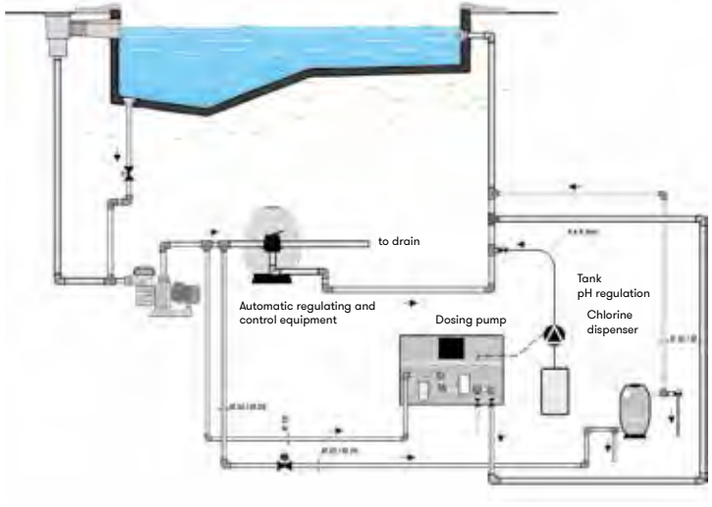

Bromine and Chlorine feeder. Manufactured from unalterable plastic materials (ABS). Approximate capacity: 5 kg of tablets for Dossi-5 kg. Supplied with two valves in order to stop the water flow. Height 486 mm and Ø 200 mm. Connections Ø 20 mm.

	Code	Standard Pack	Standard Weight kg	Standard Volume m^3
Dossi-5 off-line for pools up to 100 m^3	01413	1	3.7	0.031

	Volume of chlorine-treated pool	Volume of bromine-treated pools
Dossi 5	20 m3 - 80 m^3	4 $m3^3$ - 50 m^3

DOSING EQUIPMENT

DOSSI-5

OFF-LINE CHLORINE AND BROMINE FEEDER



AQUAFORTE PRIME
POWER SIGNAL UV

NEW PRODUCT



Professional version of the very popular AquaForte Power UV-C. The AquaForte Prime Power Signal UV-C is equipped with a LED timer that continuously displays the lamp status clearly in colour.

LED status: green: everything okay; flashing green: almost end of lamp life; red: end of lamp life.

After lamp replacement, the timer can be reset so that the countdown starts again.

The unit is made of stainless steel and has 3 connections (2 × 63 mm and 1 × blind cover), plus 2 special hose connectors (32/38/40/50mm) for even more installation options. The unit is equipped with a T5 lamp for optimum operation (9000 hours).

Comes with electronic ballast for optimum operation. Average lifespan of the ballast is ± 5 years. The T5 lamp provides a radiation value of 25,000 microwatts. Working pressure maximum 2 bar. Keeps bacteria and algae under control.

TYPE	ART NR.	MAX POND	MAX FLOW M³/H
Power Signal UV 75 watt	SB396	70 m³	20
Replacement lamp 75 Watt T5	SB619	-	-
Quartz glass	SB688A	-	-

POWER SIGNAL UV Code: SB396



Disinfection of pond water is the solution for preventing green pond water and is therefore indispensable in every pond. Why it is important to always use a UV-C unit in your pond:

- Rapid improvement of water quality.
- A crystal clear pond without the addition of chemicals.
- Protects fish and other pond life from pathogens.
- Environmentally friendly technology.
- Overdosing is not possible.
- Reduces the maintenance of your pond.

Redesigned electronic ballast has a signal lamp that indicates the status of the UV-C lamp:

- Green: everything okay
- Flashing green: lamp(s) almost at end of life
- Red: lamp(s) at end of life
- After lamp replacement the timer can be reset so the countdown starts again.



	BUSTER UV-C 140W AMALGAAM	BUSTER UV-C 420W AMALGAAM
Code	SB397	SB398
Rec. flow for 30 mJ/cm²	23 m³/h	49 m³/h
Max. pressure	2,5 bar	2,5 bar
Max. flow	25 m³/h	49 m³/h
Diameter unit Ø	114 mm	219mm
Length unit	930 mm	930 mm
Diameter in-outlet Ø	2" male threaded	3" male threaded
Housing	316L	316L
Electronic ballast	230V AC 50/60Hz	230V AC 50/60Hz
Maximum current	0,7A	1,9A
Lamp power	140W	3 × 140W
Lamp	VGE T6 140W Amalgaam 4P	3× T6 140W Amalgaam 4P
Ambient temperature Timer Box	1-40 °C	1-40 °C
Lifespan lamp	16.000 h	16.000 h
Lamp status indicator	√	√
Replace lamp alert	√	√
Flow switch	√	√

BUSTER UV-C 140W Code: SB397

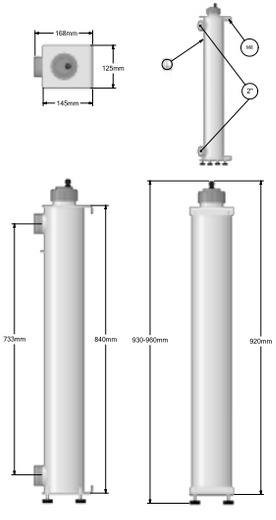

BUSTER UV-C 420W Code: SB398

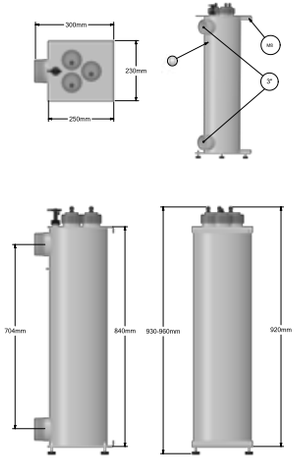

FLUIDRA IN THE WORLD

AUSTRALIA FLUIDRA AUSTRALIA	111 Indian Drive, Keysborough, Victoria, 3173	00 6139554 2200	sales@astralpool.com.au
AUSTRIA SSA FLUIDRA ÖSTERREICH	Untersbergstraße 10, A-5082 Salzburg-Grödig (AUSTRIA)	0043 0624677000	office@ssa.co.at
BELGIUM ASTRALPOOL BELGIQUE	Rue de la Glacerie 122 6180 Courcelles	00 32 71 45 24 08	belgique@fluidra.be
BOSNIA HERZEGOWINA FLUIDRA BH			
BRASIL FLUIDRA BRASIL	Rua João Voss Júnior, 23 - Barrio Guarani CEP: 88350-685 – Brusque/SC (BRAZIL)	00 55 47 3255.9700	vendas@fluidra.com.br
BULGARIA FLUIDRA BALKANS	191 " Golyamokonarsko shose" str. 4027 Plovdiv	359 32 950 023	sales@fluidrabalkans.com
CHILE FLUIDRA CHILE	El Conquistador del Monte 4731 HUECHURABA, SANTIAGO (CHILE)	00 56 27400830	info@fluidra.cl
CHINA ASTRALPOOL CHINA	Room 1008, 10th Floor, Hongwell International - Plaza No 1602 Zhong Shan West Road - 200235 Shangai (CHINA)	00 86 2163910575	xiao.he@fluidra.com.cn
COLOMBIA FLUIDRA COLOMBIA	Km. 7 Autopista Medellín, Celta Trade Park, Lote 155, Bodega 1, Funza Cundinamarca. El código postal es: 250028	00 571 7021991	fluidracolombia@fluidra.com.co
CROATIA FLUIDRA ADRIATIC	Kovinska 4a 1000 Zagreb (CROATIA)	00 385 17988790	info@fluidra.hr
CYPRUS ASTRALPOOL CYPRUS	Mantheou Mantheou 5, Industrial Area Ag. Athanasios 4101, Limassol (CYPRUS)	00 357 257 54424	info@astralpool.com.cy
CZECH REPUBLIC ASTRAL BAZENOVE	Doubravice 86 25170 Dobrejovice Praha-Vychod (CZECH REPUBLIC)	00 420 323 638206	info@astralpool.cz
DENMARK FLUIDRA NORDIC	Kometvej 28 6230 Rødekro (DENMARK)	00 45 74 69 39 99	
EGYPT FLUIDRA EGYPT	Plot No.82, Qamaen El Geer, Industrial Zone - Third Colony, Qattameya, New Cairo, Cairo (Egypt)	00 20 1271779887	mnahhal@fluidraegypt.com
FRANCE FLUIDRA COMMERCIAL FRANCE	Avenue Maurice Bellonte 66000 PERPIGNAN (FRANCE)	00 33 04 11 300 200	callcenter@fluidra.fr
GERMANY FLUIDRA DEUTSCHLAND GMBH	Carl-Benz-StraBe 18 D-69493 Hirschberg	00 49-81 53-987490	info@fluidra.de
GREECE FLUIDRA HELLAS	FLUIDRA ΕΛΛΑΣ Α.Ε.περισσότερες πληροφορίεςΟ σταθμός είναι προσβάσιμος- Thesi Lakko Katsari Ασπρόπυργος 193 01	00 30 21 0559 4527	info@astralpool.gr
HUNGARY FLUIDRA MAGYARORSZÁG	2311 Szigetszentmiklós Leshegy út 2-4., Magyarország (HUNGARY)	00 36 24525868	jdominguez@astralpool.hu
INDIA ASTRAL INDIA CERTIKIN INDIA	C-77, Ground Floor, DDA Shed, Near Crown Plaza Hotel, Okhla Industrial Area Phase-1, New Delhi- 110 021	011- 4905 4775	info@astralpool.in manuj@certikin.in
INDONESIA FLUIDRA INDONESIA	Pondok Indah Office Tower 1 Level 12 Suite 12 01 Jl. Sultan Iskandar Muda Kav. V, TA Pondok Pinang Jakarta 12311	00 62 21 769 71 20	syapetier@fluidra.co.id

ITALY FLUIDRA COMMERCIALE ITALIA	Via Tre Bocche, 7/e Bedizzole, Brescia (ITALY)	00 39 0306870441	info@astralpool.it
KAZAKHSTAN FLUIDRA KAZAKHSTAN	Republic of Kazakhstan, 050059, Almaty City, Bostandyk district, Al-Farabi avenue, house 17/1, n.p. 16a.	00 7 727 311-15-79	bmikhail@fluidra.kz
MALAYSIA FLUIDRA MALAYSIA	46 Jalan Prima Saujana 1/1a Prima Saujana 43000 Kajang Selangor (MALAYSIA)	00 60 387341030	info@fluidra.com.my
MEXICO FLUIDRA MEXICO	Margarita Maza de Juárez no6, lote 18 Fraccionamiento industrial los Reyes Tlalnepantla, Edo de Méxic	00 52 555 5715 7777	fluidramexico@fluidra.mx
MIDDLE EAST FLUIDRA MIDDLE EAST	PLOT no MO-0715 P.O. BOX 61020 JEBEL ALI FREE ZONE DUBAI U.A.E	00 9714 883 5505	info@fluidrame.com
MONTENEGRO FLUIDRA MONTENEGRO	Cvijetna 27 81000 Podgorica (MONTENEGRO)	00 382 20651188	vdjurisic@fluidra.me
MOROCCO FLUIDRA MAROC	Boulevard Moulay Slimane Casablanca, Ain Sebaa-Hay Mohammedi, Grand Casablanca	00 212 22672275	sgmach@fluidra.ma
NETHERLANDS FLUIDRA SIBO	Doornhoek 3950 5465 TC Veghel (NL)	00 31 (0)413 – 29 39 18	sales@sibo.nl
POLAND FLUIDRA POLSKA	Aleja Armii Krajowej 61 Wroclaw, Breslavia (POLAND)	00 48 713604930	office@astralpool.pl
PORTUGAL FLUIDRA COMERCIAL PORTUGAL	Rua Alfredo da Silva, 41 Trajouce – Sao Domingos de Rana (PORTUGAL)	00 351 21 444 720	comerical@fluidra.pt
ROMANIA FLUIDRA ROMANIA	Strada Lt. Nicolae Pascu, Sector 3 Bucureşti, Municipiul Bucureşti (ROMANIA)	00 40 213481443	kiril@fluidrabalkans.com
RUSSIA ATRAL SNG	Krasnoproletarskaya str, 16 buil.2 ent.5 127473 Moscow	7 (495) 665-60-11	info@astralpool.ru
SERBIA FLUIDRA SERBICA	Batajnicki drum bb,14km. 11080 BELGRADE (SERBIA)	00 381 113033305	nzlatanovic@fluidra.rs
SINGAPORE ASIA EXPORT	Fluidra Singapore Pte ltd 81 Ubi Avenue 4 #01-08. UB.One. 408831	00 65 6382 0130	info@fluidra.sg
SOUTH AFRICA FLUIDRA SOUTH AFRICA	Nitor Building, Cnr Commerce Cres East & Dartfield Rd, Eastgate Ext 13, Sandton	011 555 1000	customercare@waterlinx.co.za
SPAIN FLUIDRA COMERCIAL ESPAÑA	Carrer Pintor Velázquez, 10, Polinyà (BARCELONA) ESPAÑA	00 34 937136344	clientes@fluidra.es
SWEDEN FLUIDRA NORDIC	Ekenleden 11A Alvered	00 46 31994100	order@fluidra.se
SWITZERLAND ASTRALPOOL SWITZERLAND	Via Industria, 10 6930 Bedano, Lugano	00 41 919354080	rgaletta@astralpool.ch
THAILAND FLUIDRA THAILAND	110/4 13 Rachathewa, Bangplee samutprakam 10540 Samutprakam	00 66 738 9420 4	info@astralpool.co.th
TURKEY FLUIDRA TURKEY	Aydinli Mah. Birlik Organize Sanayi Bolgesi 1 Nolu Cad. No:3 Tuzla/ Istanbul	00 (90) 216 387 05 56 - 57 - 58	info@fluidra.com.tr
UNITED KINGDOM ASTRALPOOL UK LTD	Units 30-32, Palmerston Business Park PO14 IDJ – Newgate Lane	44 (0) 1329 514000	sales@astralpooluk.com
USA FLUIDRA USA, LLC	8526 Mallory Road Jacksonville, FL 32220	00 (904) 378-0999	customerservice@fluidra.us
VIETNAM FLUIDRA VIETNAM	31 Nguyễn Thị Thập Tân Hưng Quận 7 Hồ Chí Minh, Vietnam	00 84 8 6684 4280	info@fluidra.vn

Fountain of ideas.

ASTRALPOOL

FLUIDRA